LOW VOLTAGE AC DRIVES

ABB general purpose drives

ACS530 R1-R9, 0.75 to 250 kW

ACS530: general purpose drives

Easy to use – a reliable choice

Contents

04 The all-compatible ACS530 Series
06 Reliable and easy to use
08 Technical data
09 Typical industries and applications
10 Standard interface and extensions for plug-in connectivity
11 How to select a drive
12 Ratings, types and voltages
13 Communication and connectivity
14 Control panel options
15 Cabinet door opening size for basic control panel
16 Additional options
17 du/dt filters
18 Resistor braking options
19 Cooling and fuses
20 EMC – electromagnetic compatibility
21 Harmonic mitigation
22 EU Ecodesign Regulation
23 Drivetune mobile application for wireless access
24 Our service expertise, your advantage
26 ABB Drives Life Cycle Management

The all-compatible ACS530 series

Easy to use – a reliable choice

ACS530 is part of the ABB all-compatible drives portfolio. Its rich built-in features and compact design ensure higher reliability while simplifying operation. With ABB's strong services, ACS530 is your reliable choice.

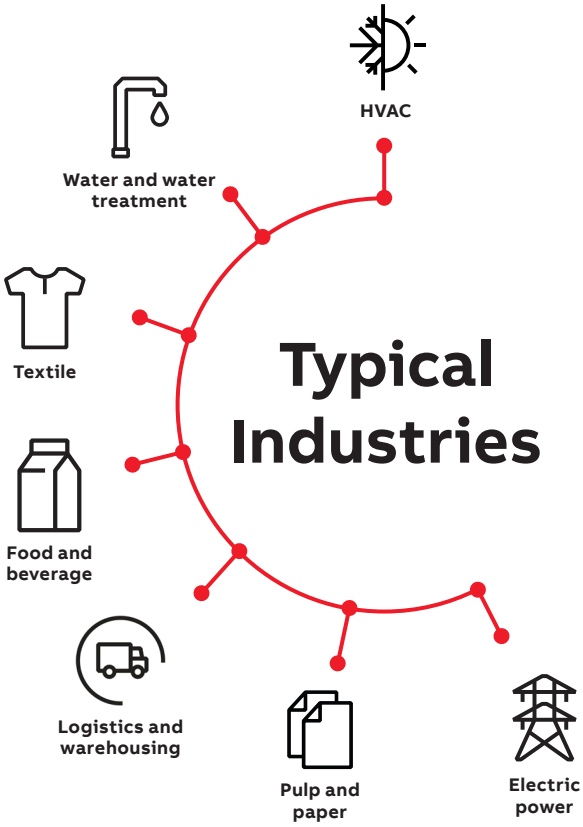

Easy to use

Graphical interface control panel as standard, integrated PID, PFC, SPFC etc. macro settings, and there are a variety of built-in important features. ABB's smartphone APP Drivetune, Bluetooth control panle and IoT panel etc. make drive easier and faster to use.

ACS530 has same user interface, tools and options with other ABB all-compatible drives.

Safe and reliable

Design features such as enhanced coated circuit boards, independent cooling air ducts and 50 °C ambient temperature design make ACS530 more adaptable to harsh applications such as high humidity, corrosive air and dust. ACS530 has passed a series of reliability tests that simulate harsh operating conditions in the lab.

Each drive passed full load testing during production.

Built-in STO (safe torque off) ensures the safety of the mechanism.

Complete configuration

Built-in EMC filter, dual DC choke and STO as standard in full power range.

Built-in Modbus communication can be connected to automation network.

ACS530 frame R1 to R3 integrates with the brake chopper and can be used in fast stop applications.

The standard graphical interface control panel helps customers save costs and ensures commissioning is simple.

Excellent services

ABB responds quickly to customer needs. Products are delivered from multi-center warehouses to save time on logistics. The 7*24 global service network and standard warranty policy ensure you get excellent ABB services.

Loc
50.0Hz
49.50
Hz
Back
OK
Stop
Loc/Rem
Start
ABB

Reliable and easy to use

The ACS530 general purpose drive is an ABB all-compatible drive.
ACS530 can provide you with reliability and efficiency over its entire life cycle.

Designed for reliability

Enhanced coated circuit board, independent cooling air ducts, grounding fault protection and up to 50 °C operation ambient temperature, and each drive passed full load testing during production, these make ACS530 a reliable choice for customers.

Built-in functions

ACS530 complies with multiple IEC standards, and integrates with built-in functions such as EMC filter, dual DC choke, Modbus RTU field bus interface and safe torque off. This helps customer simplify drive selection and save costs.

Optimized pump and fan control

ACS530 optimized pump and fan control. With the integration of various functions like PID, PFC and SPFC and other macro settings, it effectively reduces engineer's effort.

Basic control panel as standard

The control panel has Chinese/ graphical swichable menu, it is very convenient for completing basic settings, and is easy to use and operate.

The important built-in functions and compact design of ACS530 can improve the reliability of traditional applications and simplify operation – especially in challenging ambient conditions.

Energy saving

According to square torque, even a small speed change can cause a huge difference in energy consumption. Through the energy efficiency control, ACS530 helps customers reduce energy consumption and save costs throughout the life cycle. Built-in energy optimization function – The built-in energy saving calculator help you monitor the energy consumption in production to ensure energy saving.

Fulfill EU Ecodesign regulation, drive achieves IE2 Efficiency level.

STO-Safe Torque Off

The built-in STO function, designed in accordance with IEC61800-5-2 standard, complies with the EU Machinery Directive 2006/42/EC. It has TUV Nord certificate and meets the highest level of the SIL3/PL e standard.

CE

ACS530 meets the requirements of Low Voltage Directive, Machinery Directive, EMC Directive, RoHS III Directive and Ecodesign Directive.

All-compatible user interface

ACS530 is part of the ABB all-compatible drives portfolio. Other products in this portfolio include ACS380, ACS580 and ACS880. All these drives have the same easy-to-use PC tools, and a similar intuitive multi-language user interface and parameter structure, which simplifies learning and use.

Technical data

Mains connection	
Voltage	3-phase, U_N 380 to 480 V, +10%/-15%
Power range	0.75 to 250 kW
Frequency	47 Hz to 63 Hz
Power factor	cosφ = 0.98
Efficiency (rated power)	98%
Efficiency level (IEC61800-9-2)	IE2
Motor connection	
Voltage	0 to U_N, 3-phase
Frequency	0 to 500 Hz
Motor control	Scalar control

Product standards and certifications

CE
Low Voltage Directive 2014/35/EU, EN 61800-5-1: 2007
Machinery Directive 2006/42/EC, EN 61800-5-2: 2007, EN 62061:2005 + AC:2010 + A1:2013 + A2:2015, EN ISO 13849-1:2015, EN ISO 13849-2:201 2 And EN 60204-1:2018
EMC Directive 2014/30/EU, EN 61800-3: 2004 + A1: 2012
RoHS III Directive 2011/65/EU, EN50581: 2012,
China RoHS II Standard GB/T 26572
Delegated directive (EU) 2015/863, EN IEC 63000:2018
Ecodesign Directive 2009/125/EC, standard EN 61800-9-2: 2017
Quality Assurance System ISO 9001 and Environmental System ISO 14001
Waste Electrical and Electronic Equipment (WEEE) 2002/96/EC
TÜV Nord certification (safety function)
Ecodesign (EU) 2019/1781

EMC according to EN 61800-3: 2004 + A1: 2012

Built-in C2 category filter as standard

PTC input and supported thermistor	
DI6	If DI6 is used as PTC input, the wiringand the PTC sensor need to be double isolated. Otherwise the CMOD-02 I/O extension module must be used.
Supported thermistor	AI1 and AI2 or DI6, if used as PTC input, up to 6 sensors can be connected. Sensors could be PT100, PT1000, KTY83, KTY84 or Ni1000. For more information, see ACS530 hardware manual 3AXD50000728121.
Environmental limits	
Ambient temperature	
Transportation and storage	-40 to +70 °C -40 to +70 °C
Operation	-15 to +40 °C without derating +40 to +50 °C with derating
Cooling method	Air-cooled, dry clean air
Coating	Enhance coated circuit board
Altitude	0 to 1,000 m without derating 1,000 to 4,000 m with derating of 1%/100 m
Relative humidity	5 to 95%, no condensation allowed
Degree of protection	IP20
Safety features	Safe Torque Off (STO) EN 61800-5-2: SIL 3 IEC 61508 ed2: SIL 3 IEC 62061: SIL CL 3, ISO 13849-1, -2: PL e EN 60204-1
Contamination levels	No conductive dust allowed
Storage	IEC 60721-3-1, Class 1C2 (chemical gas), Class 1S2 (solid particles)*)
Transportation	IEC 60721-3-2, Class 2C2 (chemical gas), Class 2S2 (solid particles)*)
Operation	IEC 60721-3-3, Class 3C2 (chemical gas), Class 3S2 (solid particles)*)

*) C = Chemically active substances
S = Mechanically active substances

Dimensions

Dimensions, weights and space requirements

Mechanical dimensions of drive

IP20				
Frame size	**Height mm**	**Width mm**	**Depth mm**	**Weight kg**
R1	331	125	223	4
R2	432	125	229	6
R3	490	203	229	11.3
R4	636	203	257	18.5
R5	596	203	295	26.5
R6	548	252	369	42.6
R7	600	284	370	49.6
R8	680	300	393	62.8
R9	680	380	418	84.8

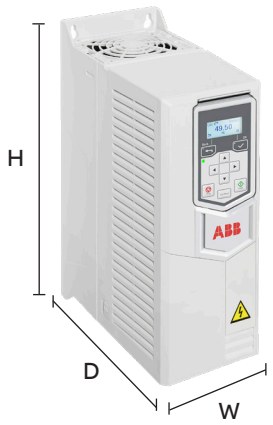

Typical industries and applications

Industry	Application	Customer benefits
HVAC	• Applied in pumps and fans for heat source companies, heat exchange stations and boiler plants • Applied in rail transit, railroad, tunnel, highway and bridge design; mainly used for fans, followed by pumps • Applied in pumps, fans and compressors in the following fields: airports, stations, stadiums, refrigeration or freezer manufacturers, and medical and health institutions with requirements for air cleanliness	• A highly reliable design, including enhanced coating and independent air ducts to ensure stable operation in high-temperature and high-humidity environments • The fire (surpass) mode is specially designed for tunnel fans • Reliable PID control to ensure stable fluid control • The advanced control panel facilitates commissioning • Optional THDi filter limit THDi<10%, complying with HVAC requirements • With EMC design, the equipment can be directly applied in the civil environment • The motor has low noise, which better meets the requirements of HVAC applications
Water and water treatment	• Municipal water supply • Water and water treatment • Irrigation water application • Seawater desalination • Fountain system	• Advanced PID loop control keeps the pipeline pressure stable • Supports the SPFC function of multi-pump control, which helps achieve a smooth pump start and stable water pressure • Optimized motor control method reduces motor noise and extends motor service life • Enhanced coating and independent air duct design ensure long-term reliable operation even in humid environments • The compact design of the low-power drive facilitates the installation in the cabinet
Textile	• Process fans and pumps for open-end spinning • Circulating water pumps and material conveyor belts in textile mills • Air conditioning systems in textile mills	• Enhanced coating and independent air duct design ensure long-term reliable operation, even in harsh environments • PID control ensures the stable operation of textile process equipment • Easy access to modern industrial networks; supports a variety of mainstream communication protocols • The STO (Safe Torque Off) function, which complies with EU safety standards, ensures the safety of equipment and personnel
Food and beverage	• Applied in mixers, conveyor belts and production equipment rooms on the production line • Refrigeration • Cold storage	• Enhanced coating and independent air duct design ensure better adaptability to dusty environments • High-quality process control improves the production efficiency of the food industry, as well as saving energy and improving work safety • ABB's superior control solutions guarantee stable speed control and high-speed operation of equipment during production • Supports a variety of mainstream communication protocols; easy access to modern industrial networks • Reliable PID control ensures stable beverage flow
Logistics and warehousing	• Conveying on non-heavy-load plane	• ABB's superior control solution ensures the smooth operation of materials • Supports packaging solutions for various products for materials transport • Supports a variety of mainstream communication protocols; easy access to modern industrial networks • The compact design of the low-power drive facilitates the installation in the cabinet • The STO (Safe Torque Off) function, which meets EU safety standards, ensures the safety of equipment and personnel
Pulp and paper	• Auxiliary drive of paper machine • Pulping process	• A highly reliable design, including enhanced coating and independent air ducts, ensures stable operation in high-temperature and high-humidity environments • Simple and easy-to-understand HMI facilitates commissioning by system integrators and troubleshooting by customers • The STO (Safe Torque Off) function meeting the EU safety standards ensures the safety of equipment and personnel • The built-in event log function facilitates recording of the running status and detection of causes of problems
Electric power	• Fans and pumps for boilers in power plants • Pumps and circulating water pumps for pumped storage • Air cooling island • Residual heat recycling in power plants	• The power-loss ride-through function enables the drive to keep running normally, even if a short-term power failure occurs • Provides a larger power range to meet the needs of various fans • A highly reliable design, including enhanced coating and independent air ducts, ensures stable operation in high-temperature and high-humidity environments • Supports a variety of mainstream communication protocols; easy access to modern industrial networks • A complete control solution and the high quality of ABB's products ensure the equipment's reliable operation
Chemical engineering	• Circulating water pumps and ventilation fans for chemical processes • Production in the pharmaceutical field (pharmaceutical production lines, mixers and related equipment for environmental protection in production)	• The design, including enhanced coating and independent air ducts, effectively protects components from corrosion and ensures reliable operation • Simple and easy-to-understand HMI facilitates the commissioning by system integrators and troubleshooting by customers • The power-loss ride-through function enables the drive to keep running normally, even if a short-term power failure occurs • The STO (Safe Torque Off) function, which meets EU safety standards, ensures the safety of equipment and personnel
Others	• Circulating pump • Ventilation fan	• Simple and easy-to-understand HMI facilitates commissioning by system integrators and troubleshooting by customers • The STO (Safe Torque Off) function, which meets EU safety standards, ensures the safety of equipment and personnel • A highly reliable design, including enhanced coating and independent air ducts, ensures stability in dusty environments • A built-in maintenance timer ensures regular equipment maintenance

Standard interface and extensions for plug-in connectivity

ACS530 drives offer a wide range of standard interfaces.
In addition, the drive has two option slots that can be used for extensions, including fieldbus adapters and input/output extension modules that allow an external +24 V supply with frame sizes R1 to R5.
For frames R6 to R11, external +24 V terminals are already integrated on the control board.
For further information, please see the ACS530 user manual.

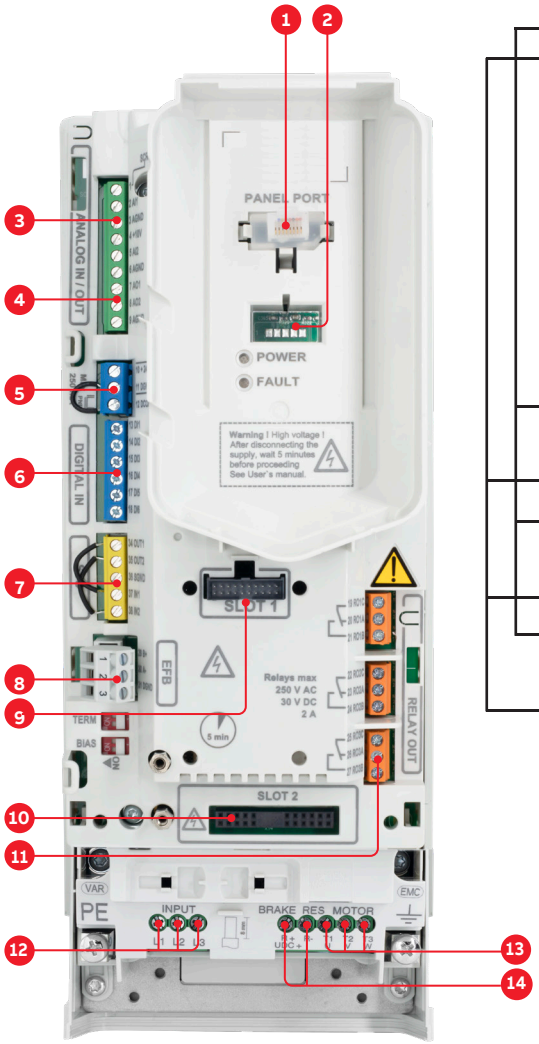

1. Panel port
2. CCA-01 cold configuration adapter
3. Analog inputs
4. Analog outputs
5. 24 V AC/DC output
6. Digital inputs
7. Safe torque off
8. Embedded Modbus RTU
9. Communication options
10. I/O extensions
11. Relay outputs
12. Mains connection
13. Motor connection
14. Brake connection

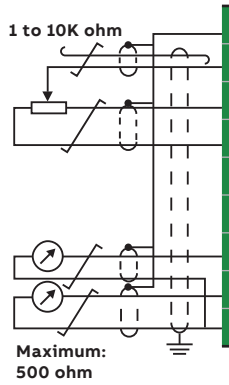

Default I/O Connection Diagram

Terminal	Meaning	Default Macro Connections
XI	**Reference voltage and analog inputs and outputs**	
1	SCR	Signal cable shielding layer
2	AI1	Manual frequency setting 1:0 to 10 V
3	AGND	Analog input ground
4	+10 V	Output reference voltage 10 V DC
5	AI2	Not used
6	AGND	Analog input ground
7	AO1	Output frequency: 0 to 20 mA
8	AO2	Output current: 0 to 20 mA
9	AGND	Analog output ground
X2 & X3	**Aux. voltage output and programmable digital input**	
10	+24 V	Aux. voltage output +24 V DC, maximum: 250 mA
11	DGND	Aux. voltage output ground
12	DCOM	Digital input common terminal
13	DI1	Stop (0)/start (1)
14	DI2	Forward (0)/Reverse (1)
15	DI3	Constant speed selection
16	DI4	Constant speed selection
17	DI5	Slope selection: Slope 1 (0)/Slope 2 (1)
18	DI6	Not used
X6,X7,X8	**Relay outputs**	
19	RO1C	Ready
20	RO1A	250 V AC/30 V DC
21	RO1B	2 A
22	RO2C	Operation
23	RO2A	250 V AC/30 V DC
24	RO2B	2 A
25	RO3C	Fault (-1)
26	RO3A	250 V AC/30 V DC
27	RO3B	2 A
X5	**EIA-485 Modbus RTU**	
29	B+	Built-in Modbus RTU fieldbus interface
30	A-	
31	DGND	The signal ground of communication must not be connected to the shielding layer of the communication line.
X4	**Safe torque off**	
34	OUT1	Safe torque off.
35	OUT2	
36	SGND	
37	IN1	
38	IN2	
X10*)	**24 V AC/DC (only available for frame size R6 to R9)**	
40	24 V	AC/DC-in. Ext. 24 V AC/DC input to power up the control unit when the main supply is disconnected
41	24 V	AC/DC+

*) For frame size R6 to R9, the terminal 40 to 41 is integrated.
For frame size R1 to R5, an I/O option is required.

How to select a drive

The right drive is very easy to select. The following instructions show you how to order the right drive for your application.

Start with identifying your supply voltage. This indicates what rating table you should use – see page 12.

Select the ordering code for ACS530 from the rating table based on your motor's nominal power rating.

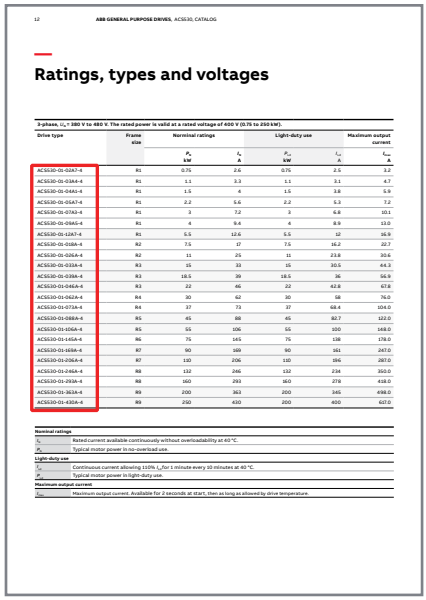

12 ABB GENERAL PURPOSE DRIVES, ACS530, CATALOG

Ratings, types and voltages

3-phase, U_N = 380 V to 480 V. The rated power is valid at a rated voltage of 400 V (0.75 to 250 kW).

Drive type	Frame size	Nominal ratings		Light-duty use		Maximum output current
		P_N kW	I_N A	P_{LD} kW	I_{LD} A	I_{max} A
ACS530-01-02A7-4	R1	0.75	2.6	0.75	2.5	3.2
ACS530-01-03A4-4	R1	1.1	3.3	1.1	3.1	4.7
ACS530-01-04A1-4	R1	1.5	4	1.5	3.8	5.9
ACS530-01-05A7-4	R1	2.2	5.6	2.2	5.3	7.2
ACS530-01-07A3-4	R1	3	7.2	3	6.8	10.1
ACS530-01-09A4-4	R1	4	9.4	4	8.9	13.0
ACS530-01-12A7-4	R1	5.5	12.6	5.5	12	16.9
ACS530-01-018A-4	R2	7.5	17	7.5	16.2	22.7
ACS530-01-026A-4	R2	11	25	11	23.8	30.6
ACS530-01-033A-4	R3	15	33	15	30.5	44.3
ACS530-01-039A-4	R3	18.5	39	18.5	36	56.9
ACS530-01-046A-4	R3	22	46	22	42.8	67.8
ACS530-01-062A-4	R4	30	62	30	58	76.0
ACS530-01-073A-4	R4	37	73	37	68.4	104.0
ACS530-01-088A-4	R5	45	88	45	82.7	122.0
ACS530-01-106A-4	R5	55	106	55	100	148.0
ACS530-01-145A-4	R6	75	145	75	138	178.0
ACS530-01-169A-4	R7	90	169	90	161	247.0
ACS530-01-206A-4	R7	110	206	110	196	287.0
ACS530-01-246A-4	R8	132	246	132	234	350.0
ACS530-01-293A-4	R8	160	293	160	278	418.0
ACS530-01-363A-4	R9	200	363	200	345	498.0
ACS530-01-430A-4	R9	250	430	200	400	627.0

Nominal ratings
I_N Rated current available continuously without overloadability at 40 °C.
P_N Typical motor power in no-overload use.
Light-duty use
I_{LD} Continuous current allowing 110% I_{LD} for 1 minute every 10 minutes at 40 °C.
P_{LD} Typical motor power in light-duty use.
Maximum output current
I_{max} Maximum output current. Available for 2 seconds at start, then as long as allowed by drive temperature.

Page 12

Choose the motor power and current rating from the ratings table on page 12.

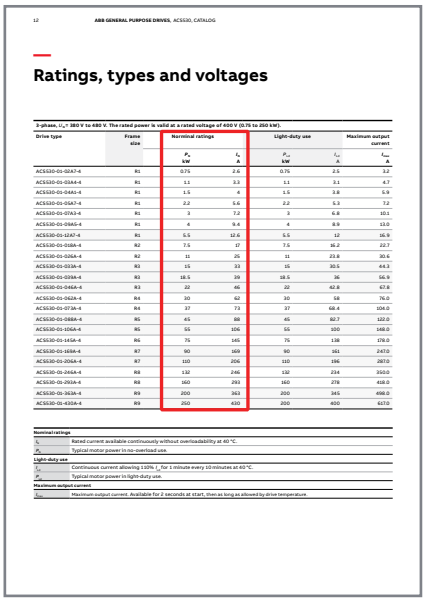

12 ABB GENERAL PURPOSE DRIVES, ACS530, CATALOG

Ratings, types and voltages

3-phase, U_N = 380 V to 480 V. The rated power is valid at a rated voltage of 400 V (0.75 to 250 kW).

Drive type	Frame size	Nominal ratings		Light-duty use		Maximum output current
		P_N kW	I_N A	P_{LD} kW	I_{LD} A	I_{max} A
ACS530-01-02A7-4	R1	0.75	2.6	0.75	2.5	3.2
ACS530-01-03A4-4	R1	1.1	3.3	1.1	3.1	4.7
ACS530-01-04A1-4	R1	1.5	4	1.5	3.8	5.9
ACS530-01-05A7-4	R1	2.2	5.6	2.2	5.3	7.2
ACS530-01-07A3-4	R1	3	7.2	3	6.8	10.1
ACS530-01-09A4-4	R1	4	9.4	4	8.9	13.0
ACS530-01-12A7-4	R1	5.5	12.6	5.5	12	16.9
ACS530-01-018A-4	R2	7.5	17	7.5	16.2	22.7
ACS530-01-026A-4	R2	11	25	11	23.8	30.6
ACS530-01-033A-4	R3	15	33	15	30.5	44.3
ACS530-01-039A-4	R3	18.5	39	18.5	36	56.9
ACS530-01-046A-4	R3	22	46	22	42.8	67.8
ACS530-01-062A-4	R4	30	62	30	58	76.0
ACS530-01-073A-4	R4	37	73	37	68.4	104.0
ACS530-01-088A-4	R5	45	88	45	82.7	122.0
ACS530-01-106A-4	R5	55	106	55	100	148.0
ACS530-01-145A-4	R6	75	145	75	138	178.0
ACS530-01-169A-4	R7	90	169	90	161	247.0
ACS530-01-206A-4	R7	110	206	110	196	287.0
ACS530-01-246A-4	R8	132	246	132	234	350.0
ACS530-01-293A-4	R8	160	293	160	278	418.0
ACS530-01-363A-4	R9	200	363	200	345	498.0
ACS530-01-430A-4	R9	250	430	200	400	627.0

Nominal ratings
I_N Rated current available continuously without overloadability at 40 °C.
P_N Typical motor power in no-overload use.
Light-duty use
I_{LD} Continuous current allowing 110% I_{LD} for 1 minute every 10 minutes at 40 °C.
P_{LD} Typical motor power in light-duty use.
Maximum output current
I_{max} Maximum output current. Available for 2 seconds at start, then as long as allowed by drive temperature.

Page 12

Choose your options (on page 13) and add the option codes to the end of the drive's ordering code.
Remember to use a "+" sign before each option code or order them as loose items.

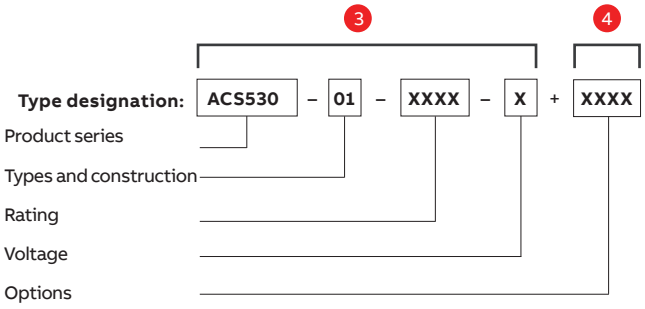

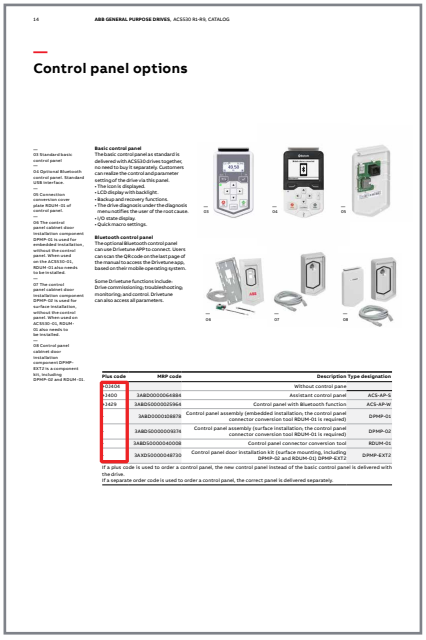

14 ABB GENERAL PURPOSE DRIVES, ACS530 R1-R9, CATALOG

Control panel options

—
03 Standard basic control panel
—
04 Optional Bluetooth control panel. Standard USB interface.
—
05 Connection conversion cover plate RDUM-01 of control panel.
—
06 The control panel cabinet door installation component DPMP-01 is used for embedded installation, without the control panel. When used in an the ACS530-01, RDUM-01 also needs to be installed.
—
07 The control panel cabinet door installation component DPMP-02 is used for surface installation, without the control panel. When used in an ACS530-01, RDUM-01 also needs to be installed.
—
08 Control panel cabinet door installation component DPMP-EXT2 is a component of the kit DPMP-02 and RDUM-01.

Basic control panel
The basic control panel as standard is delivered with ACS530 drives together, no need to buy it separately. Customers can realize the control and parameter setting of the drive via this panel.
- The basic displayed
- Backlit display and keyblight
- Backup and recovery functions
- The drive diagnosis under the diagnosis menu notifies the user of the root cause.
- I/O state display.
- Quick macro settings.

Bluetooth control panel
The optional Bluetooth control panel can use Drivetune APP to connect. Users can scan the QR code on the last page of the manual to download the APP for Android, based on their mobile operating system.

Some Drivetune functions include: Drive commissioning, troubleshooting, monitoring, and control. Drivetune can also access all parameters.

Plus code	MRP code	Description	Type designation
+J400		Without control pane	
+J400	3ABD00000064884	Assistant control panel	ACS-AP-S
+J429	3ABD50000025964	Control panel with Bluetooth function	ACS-AP-W
	3ABD00000028878	Control panel assembly (embedded installation, the control panel connector conversion tool RDUM-01 is required)	DPMP-01
	3ABD50000000974	Control panel assembly (surface installation, the control panel connector conversion tool RDUM-01 is required)	DPMP-02
	3ABD50000040008	Control panel connector conversion tool	RDUM-01
	3AXD50000048730	Control panel door installation kit (surface mounting, including DPMP-02 and RDUM-01)	DPMP-EXT2

If a plus code is used to order a control panel, the new control panel instead of the basic control panel is delivered with the drive.
If a separate order code is used to order a control panel, the correct panel is delivered separately.

Page 14

Ratings, types and voltages

3-phase, U_N = 380 V to 480 V. The rated power is valid at a rated voltage of 400 V (0.75 to 250 kW).

Drive type	Frame size	Norminal ratings		Light-duty use		Maximum output current
		P_N kW	I_N A	P_{Ld} kW	I_{Ld} A	I_{max} A
ACS530-01-02A7-4	R1	0.75	2.6	0.75	2.5	3.2
ACS530-01-03A4-4	R1	1.1	3.3	1.1	3.1	4.7
ACS530-01-04A1-4	R1	1.5	4	1.5	3.8	5.9
ACS530-01-05A7-4	R1	2.2	5.6	2.2	5.3	7.2
ACS530-01-07A3-4	R1	3	7.2	3	6.8	10.1
ACS530-01-09A5-4	R1	4	9.4	4	8.9	13.0
ACS530-01-12A7-4	R1	5.5	12.6	5.5	12	16.9
ACS530-01-018A-4	R2	7.5	17	7.5	16.2	22.7
ACS530-01-026A-4	R2	11	25	11	23.8	30.6
ACS530-01-033A-4	R3	15	33	15	30.5	44.3
ACS530-01-039A-4	R3	18.5	39	18.5	36	56.9
ACS530-01-046A-4	R3	22	46	22	42.8	67.8
ACS530-01-062A-4	R4	30	62	30	58	76.0
ACS530-01-073A-4	R4	37	73	37	68.4	104.0
ACS530-01-088A-4	R5	45	88	45	82.7	122.0
ACS530-01-106A-4	R5	55	106	55	100	148.0
ACS530-01-145A-4	R6	75	145	75	138	178.0
ACS530-01-169A-4	R7	90	169	90	161	247.0
ACS530-01-206A-4	R7	110	206	110	196	287.0
ACS530-01-246A-4	R8	132	246	132	234	350.0
ACS530-01-293A-4	R8	160	293	160	278	418.0
ACS530-01-363A-4	R9	200	363	200	345	498.0
ACS530-01-430A-4	R9	250	430	200	400	617.0

Nominal ratings	
I_N	Rated current available continuously without overloadability at 40 °C.
P_N	Typical motor power in no-overload use.
Light-duty use	
I_{Ld}	Continuous current allowing 110% I_{Ld} for 1 minute every 10 minutes at 40 °C.
P_{Ld}	Typical motor power in light-duty use.
Maximum output current	
I_{max}	Maximum output current. Available for 2 seconds at start, then as long as allowed by drive temperature.

Communication and connectivity
Options

—
01 Fieldbus adapter modules
—
02 Input/output extension modules

Fieldbus adapter modules

The ACS530 standard drive is compatible with a wide variety of fieldbus protocols. It features the Modbus RTU fieldbus interface as standard. Compared with traditional hard-wired I/O connections, the fieldbus communication reduces wiring costs.

—
01

—
Fieldbus options

MRP code	Fieldbus protocol	Adapter
3ABD68469341	DeviceNet™	FDNA-01
3ABD68469325	PROFIBUS DP. DPV0/DPV1	FPBA-01
3ABD68469376	CANopen®	FCAN-01
3ABD0000031336	Modbus RTU	FSCA-01
3ABD0000094512	ControlNet	FCNA-01
3ABD0000072069	EtherCAT®	FECA-01
3ABD0000072120	POWERLINK	FEPL-02
3ABD50000192786	2-port Ethernet/IP	FEIP-21
3ABD50000049964	2-port Modbus/TCP	FMBT-21
3ABD50000192779	2-port PROFINET IO	FPNO-21

Input/output extension modules

Standard input and output can be extended by using optional analog and digital input/output extension modules. These modules can be easily installed on the expansion slot.

—
02

—
Input/output options

MRP code	Description	Type designation
3ABD50000004420	External 24 V AC and DC 2 x RO and 1 x DO	CMOD-01
3ABD50000004418	External 24 V and isolated PTC interface	CMOD-02
3ABD50000004431	115/230 V digital input 6 x DI and 2 x RO	CHDI-01
3AXD50000137954	Bipolar analog I/O adapter module	CBAI-01

Control panel options

—
03 Standard basic control panel
—
04 Optional Bluetooth control panel. Standard USB interface.
—
05 Connection conversion cover plate RDUM-01 of control panel.
—
06 The control panel cabinet door installation component DPMP-01 is used for embedded installation, without the control panel. When used on the ACS530-01, RDUM-01 also needs to be installed.
—
07 The control panel cabinet door installation component DPMP-02 is used for surface installation, without the control panel. When used on ACS530-01, RDUM-01 also needs to be installed.
—
08 Control panel cabinet door installation component DPMP-EXT2 is a component kit, including DPMP-02 and RDUM-01.

Basic control panel
The basic control panel as standard is delivered with ACS530 drives together, no need to buy it separately. Customers can realize the control and parameter setting of the drive via this panel.
- The icon is displayed.
- LCD display with backlight.
- Backup and recovery functions.
- The drive diagnosis under the diagnosis menu notifies the user of the root cause.
- I/O state display.
- Quick macro settings.

Bluetooth control panel
The optional Bluetooth control panel can use Drivetune APP to connect. Users can scan the QR code on the last page of the manual to access the Drivetune app, based on their mobile operating system.

Some Drivetune functions include: Drive commissioning; troubleshooting; monitoring; and control. Drivetune can also access all parameters.

—
03

—
04

—
05

—
06

—
07

—
08

Plus code	MRP code	Description	Type designation
+0J404		Without control pane	
+J400	3ABD0000064884	Assistant control panel	ACS-AP-S
+J429	3ABD50000025964	Control panel with Bluetooth function	ACS-AP-W
-	3ABD0000108878	Control panel assembly (embedded installation; the control panel connector conversion tool RDUM-01 is required)	DPMP-01
-	3ABD50000009374	Control panel assembly (surface installation; the control panel connector conversion tool RDUM-01 is required)	DPMP-02
-	3ABD50000040008	Control panel connector conversion tool	RDUM-01
-	3AXD50000048730	Control panel door installation kit (surface mounting, including DPMP-02 and RDUM-01) DPMP-EXT2	DPMP-EXT2

If a plus code is used to order a control panel, the new control panel instead of the basic control panel is delivered with the drive.
If a separate order code is used to order a control panel, the correct panel is delivered separately.

Cabinet door opening size for basic control panel

The ACS-BP-S basic control panel can be directly installed on the cabinet door, just open a wiring hole and two screw holes on the cabinet door. Please refer to the right picture for the hole size (this picture is control panel's back side):

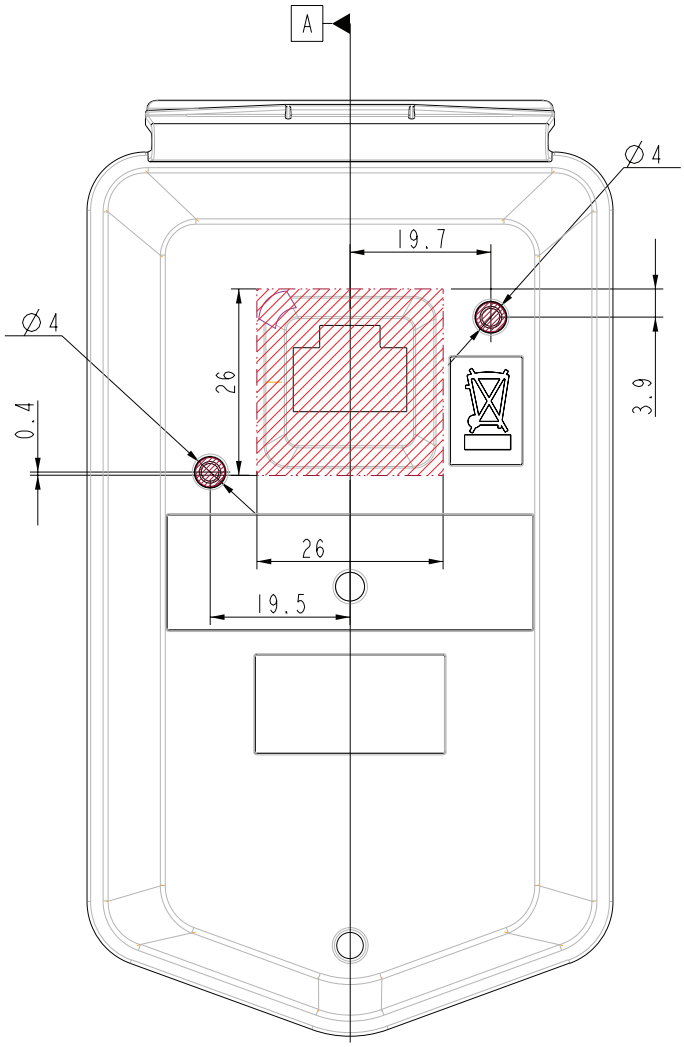

Panel's center line

Additional options

09 Cold configuration adapter CCA-01
—
10 Remote monitoring tool NETA-21
—
11 Drive composer PC tool

Cold configuration adapter
The safely configured CCA-01 cold configuration adapter applicable to unpowered drives provides a serial communication interface for an unpowered ACS530 drive. Through the adapter, serial communication and control board power can be safely isolated. The power is supplied by the PC's USB port.

Remote monitoring tool
The drive can be conveniently accessed through the Internet or local Ethernet during remote monitoring, and access to the NETA-21 remote monitoring tool is enabled around the world. NETA-21 features a web server that is compatible with a standard network browser, ensuring easy access to the network-based user interface. Through the network interface, the user can configure the drive parameters and monitor the drive log data, load level, running time, energy consumption, I/O data and the temperature of the motor bearing connected to the drive.

PC Tool
The Drive Composer PC tool provides fast and synchronized setup, commissioning and monitoring for fully compatible drives. The free version offers startup and maintenance functions, which allows all drive information such as parameter recorders, faults, spare parts and lists to be collected in the support diagnostic file. The professional version of Drive Composer offers more features like a customized parameter window, graphic control charts of drive configuration, and enhanced monitoring and diagnostic functions.

—
09

—
10

—
11

—
Cold configuration adapter

MRP code	Description	Type designation
3ABD50000019865	Cold configuration adapter, packaged kit	CCA-01

—
Remote monitoring option

MRP code	Description	Type designation
3ABD0000094517	2 x control panel bus interface 2 x 32 = maximum 64 drives 2 x Ethernet interface SD memory card USB port for WLAN/3G	NETA-21

—
Drive Composer

Link/MRP code	Description	Type designation
new.abb.com/drives/software-tools/drive-composer	Download Drive Composer starter version for free	-
3ABD0000108087	Professional version stand-alone version of Drive Composer debugging software	DCPT-01 Single user version
3ABD0000145150	Professional version of Drive Composer debugging software for a maximum of 10 users	DCPT-01 10-user version
3ABD0000145151	Professional version of Drive Composer debugging software for a maximum of 20 users	DCPT-01 20-user version

du/dt filters

du/dt filtering suppresses inverter output voltage spikes and rapid voltage changes that stress motor insulation. Additionally, du/dt filtering reduces capacitive leakage currents and high-frequency emissions from the motor cable, as well as high-frequency losses and bearing currents in the motor.
The need for du/dt filtering depends on the motor insulation. For information on the construction of the motor insulation, consult the manufacturer. More information on the du/dt filters can be found in the ACS530 hardware manual.

ACS530 external du/dt filter

ACS530	du/dt filter type																
	IP00									IP22				IP54			
	LOCH0016-60	LOCH0030-60	LOCH0070-60	NOCH0016-60	NOCH0030-60	NOCH0070-60	NOCH0120-60*)	FOCH0260-70	FOCH0320-50	NOCH0016-62	NOCH0030-62	NOCH0070-62	NOCH0120-62	NOCH0016-65	NOCH0030-65	NOCH0070-65	NOCH0120-65
ACS530-01-02A7-4	x			x						x				x			
ACS530-01-03A4-4	x			x						x				x			
ACS530-01-04A1-4	x			x						x				x			
ACS530-01-05A7-4	x			x						x				x			
ACS530-01-07A3-4	x			x						x				x			
ACS530-01-09A5-4	x			x						x				x			
ACS530-01-12A7-4	x			x						x				x			
ACS530-01-018A-4		x			x						x				x		
ACS530-01-026A-4		x			x						x				x		
ACS530-01-033A-4			x			x						x				x	
ACS530-01-039A-4			x			x						x				x	
ACS530-01-046A-4			x			x						x				x	
ACS530-01-062A-4			x			x						x				x	
ACS530-01-073A-4							x						x				x
ACS530-01-088A-4							x						x				x
ACS530-01-106A-4							x						x				x
ACS530-01-145A-4								x									
ACS530-01-169A-4								x									
ACS530-01-206A-4								x									
ACS530-01-246A-4								x									
ACS530-01-293A-4								x									
ACS530-01-363A-4									x								
ACS530-01-430A-4									x								

*) Contains 3 filters, the dimensions listed is only for one filter.

Dimensions and weights

du/dt filter	Height (mm)	Width (mm)	Depth (mm)	Weight (kg)
LOCH0016-60	205	140	125	2.6
LOCH0030-60	233	165	143	4.8
LOCH0070-60	261	190	175	9.6
NOCH0016-60	195	140	115	2.4
NOCH0016-62/65	323	199	154	6
NOCH0030-60	215	165	130	4.7
NOCH0030-62/65	348	249	172	9
NOCH0070-60	261	180	150	9.5
NOCH0070-62/65	433	279	202	15.5
NOCH0120-60*	200	154	106	7
NOCH0120-62/65	765	308	256	45
FOCH0260-70	382	340	254	47
FOCH0320-50	662	319	293	65

Resistor braking options

Brake chopper
For ACS530 drive (R1 to R3), the brake chopper is built in as standard.
For ACS530 drive (R4 to R9), external brake chopper is needed.

Brake resistor
The brake resistors are separately offered for the ACS530. Resistors other than the standard option may be used, provided that the specified resistance value is within the specified limits, and the heat dissipation capacity of the resistor is sufficient for the drive application (see hardware manual). No separate fuses in the brake circuit are required if the conditions for the mains cable, for example, are protected with fuses, and no mains cable/fuse overrating occurs.

ACS530 R1-R3 reference resistor types for maximum braking power.

ACS530 R1-R3	Frame size	R_{min} ohm	R_{max} ohm	P_{BRmax} kW	Reference resistor types Danothem
3-phase U_N = 400 or 480 V (380 to 415 V, 440 to 480 V)					
02A7-4	R1	52	864	0.6	CBH 360 C T 406 210R
03A4-4	R1	52	582	0.9	CBH 360 C T 406 210R
04A1-4	R1	52	392	1.4	CBH 360 C T 406 210R
05A7-4	R1	52	279	2.0	CBH 360 C T 406 210R
07A3-4	R1	52	191	2.9	CBR-V 330 D T 406 78R UL
09A5-4	R1	52	140	3.9	CBR-V 330 D T 406 78R UL
12A7-4	R1	52	104	5.3	CBR-V 330 D T 406 78R UL
018A-4	R2	31	75	7.3	CBR-V 560 D HT 406 39R UL
026A-4	R2	22	52	10	CBR-V 560 D HT 406 39R UL
033A-4	R3	16	37	15	CBT-H 560 D HT 406 19R
039A-4	R3	10	27	20	CBT-H 760 D HT 406 16R
046A-4	R3	10	22	25	CBT-H 760 D HT 406 16R

ACS530 R4-R9 external Brake chopper and resistor reference types for maximum braking power.

ACS530 R4-R9	Frame size	R_{min} ohm	R_{max} ohm	P_{BRmax} kW	Brake Chopper	Reference resistor types
3-phase U_N = 400 or 480 V (380 to 415 V, 440 to 480 V)						
062A-4	R4	7.8	18.1	30	ACS-BRK-D	Built-in with the brake chopper
073A-4	R4	7.8	13.1	42	ACS-BRK-D	Built-in with the brake chopper
088A-4	R5	7.8	10.7	51	ACS-BRK-D	Built-in with the brake chopper
106A-4	R5	1.3	8.7	63	NBRA-658	SAFUR125F500
145A-4	R6	1.3	7.1	77	NBRA-658	SAFUR125F500
169A-4	R7	1.3	5.2	105	NBRA-658	SAFUR200F500
206A-4	R7	1.3	4.3	126	NBRA-658	SAFUR200F500
246A-4	R8	1.3	3.5	156	NBRA-658	2xSAFUR125F500
293A-4	R8	1.3	2.9	187	NBRA-658	2xSAFUR210F575
363A-4	R9	0.7	2.4	227	NBRA-658	2xSAFUR200F500
430A-4	R9	0.7	1.9	284	NBRA-658	2xSAFUR200F500

Symbol	
R_{min}	Allowable minimum resistance connected to the brake chopper
R_{max}	Maximum allowable resistance supporting P_{BRmax}
P_{BRmax}	The maximum braking capacity of the drive must exceed the required braking power

Warning! Do not use brake resistances below the minimum value specified for the specific drive.
The drive and internal chopper cannot handle overcurrent caused by low resistance.

Cooling and fuses

Cooling
ACS530 drives are fitted with variable-speed cooling air fans. The cooling air must be free from corrosive materials and not exceed the maximum ambient temperature of 40 °C for frames R1 to R9 (50 °C with derating). The speed-controlled fans cool the drive only when needed, which reduces overall noise level and energy consumption.

Fuse connections
Standard fuses can be used with ABB general purpose drives. For input fuses, see the table below.

Cooling air flow and recommended input protection fuses for 400 V units

Type designation	Frame size	Cooling air flow 400 V units			Recommended input protection fuses for 400 V units ***)	
		Heat dissipation *)	Air flow	Max. noise level **)		IEC fuses
		(W)	(m^3/h)	(dBA)	(A)	Fuse type
ACS530-01-02A7-4	R1	45	43	55	4	gG
ACS530-01-03A4-4	R1	55	43	55	6	gG
ACS530-01-04A1-4	R1	66	43	55	6	gG
ACS530-01-05A7-4	R1	84	43	55	10	gG
ACS530-01-07A3-4	R1	106	43	55	10	gG
ACS530-01-09A5-4	R1	133	43	55	16	gG
ACS530-01-12A7-4	R1	174	43	55	16	gG
ACS530-01-018A-4	R2	228	101	66	25	gG
ACS530-01-026A-4	R2	322	101	66	32	gG
ACS530-01-033A-4	R3	430	179	70	40	gG
ACS530-01-039A-4	R3	525	179	70	50	gG
ACS530-01-046A-4	R3	619	179	70	63	gG
ACS530-01-062A-4	R4	835	134	69	80	gG
ACS530-01-073A-4	R4	1024	134	69	100	gG
ACS530-01-088A-4	R5	1240	139	63	100	gG
ACS530-01-106A-4	R5	1510	139	63	125	gG
ACS530-01-145A-4	R6	1476	435	67	160	gG
ACS530-01-169A-4	R7	1976	450	67	250	gG
ACS530-01-206A-4	R7	2346	450	67	315	gG
ACS530-01-246A-4	R8	3336	550	65	355	gG
ACS530-01-293A-4	R8	3936	550	65	425	gG
ACS530-01-363A-4	R9	4836	1150	68	500	gG
ACS530-01-430A-4	R9	6036	1150	68	630	gG

*) Heat dissipation value is a reference for cabinet thermal design. According to Ecodesign regulations.
**) The maximum noise level at full fan speed. When the drive is not operating at full load and at maximum ambient temperature the noise level is lower.
***) For detailed fuse sizes and types, please see the ACS530 HW manuals.

EMC – electromagnetic compatibility

What is EMC?
EMC stands for electromagnetic compatibility. It is the ability of electrical/electronic equipment to operate without problems in an electromagnetic environment.

Likewise, the equipment must not disturb or interfere with any other product or system in its locality. This is a legal requirement for all equipment taken into service within the European Economic Area (EEA).

Installation environments
A power drive system (PDS) can be connected to either industrial or public power distribution networks. The environment class depends on the way the PDS is connected to power supply.

The **1st environment** includes domestic premises. It also includes establishments directly connected without an intermediate transformer to a low voltage power supply network that supplies buildings used for domestic purposes.

The **2nd environment** includes all establishments directly connected to public low voltage power supply networks.

Immunity and emission compatibility

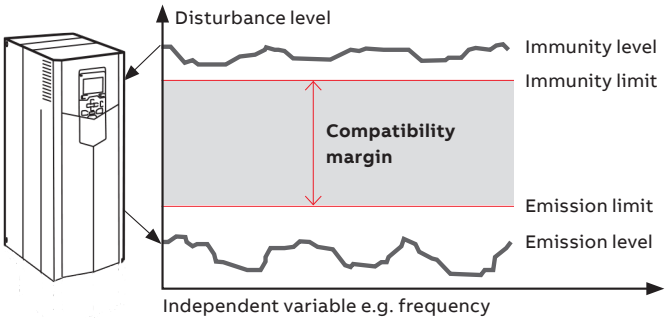

Installation environments

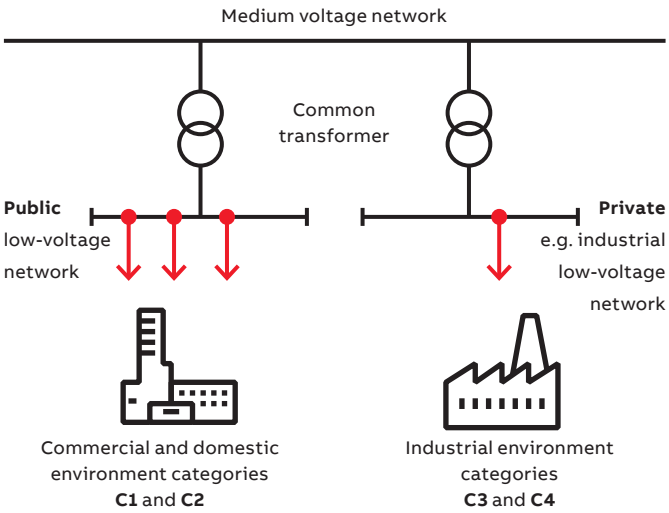

The built-in C2 EMC filter as standard in the full power range of ACS530 to reduce high-frequency electromagnetic radiation.

ACS530 meets EMC standard (EN 61800-3) category C2 requirement.

Comparison of EMC standards

EN 61800-3, product standard	EN 61800-3, product standard	EN 55011, product family standard for industrial, scientific and medical (ISM) equipment	EN 6100-6-4, generic emission standard for industrial environments	EN 61000-6-3, generic emission standard for residential, commercial and light-industrial environments
Category C1	1st environment, unrestricted distribution	Group 1. Class B	Not applicable	Applicable
Category C2	1st environment, restricted distribution	Group 1. Class A	Applicable	Not applicable
Category C3	2nd environment, unrestricted distribution	Group 2. Class A	Not applicable	Not applicable
Category C4	2nd environment, restricted distribution	Not applicable	Not applicable	Not applicable

Harmonic mitigation

What are harmonics?
Harmonic currents are created by non-linear loads connected to the power distribution system. Harmonic distortion is a form of pollution in the electric plant that can cause problems if the voltage distribution caused by harmonic currents increases above certain limits.

All power electronic converters used in different types of electronic systems can increase harmonic disturbances by injecting harmonic currents directly into the grid.

Electricity supply is hardly ever a pure sine wave voltage, and current that deviates from the sine form contains harmonics. The distortion is caused by non-linear loads connected to the electrical supply. Harmonics cause disturbances and equipment failures.

—
The total current as the sum of the fundamental and 5th harmonics

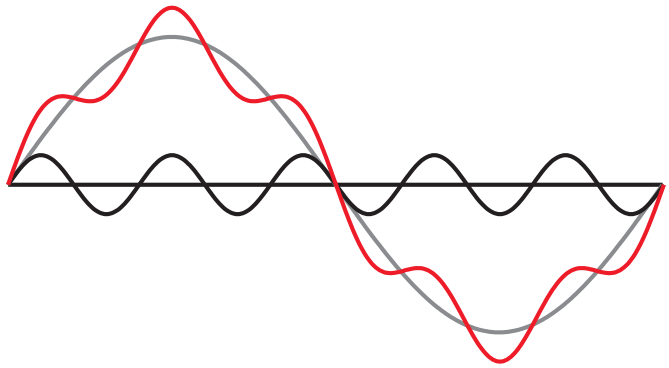

Fundamental signal = sin(x)
Periodic signal (x) = Fundamental + 5th = sin(x) + 0.2sin(5x)
5th harmonic = 0.2sin(5x)

—
Where do the harmonics come from?

Non-linear loads such as:

- Variable speed drives
- Uninterrupted power supplies (UPS)
- Industrial rectifiers
- Welding machines
- Fluorescent lighting systems (electronic ballast)
- Computers
- Printers
- Servers
- Electronic appliances

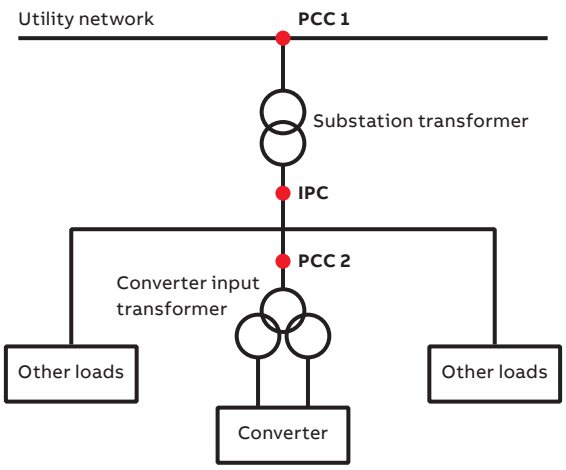

- Point of common coupling (**PCC**) is the point where the harmonic distortion is specified, e.g.
  - between the plant and the utility network (**PCC1**)
  - between the non-linear load and other loads within an industrial plant (**PCC 2**)

- In-plant point of coupling (**IPC**) is the point inside the customer system or installation to be studied

—
The effects of harmonic distortions

Harmonic currents	Harmonic voltage
Mainly affect the power distribution system up to the rectifier: • Additional losses in wires and cables • Extra heating of transformers • Circuit breaker malfunctioning	Can affect other equipment connected to the electrical system: • Erratic operation of telecommunication systems, computers, video monitors, electronic test equipment, etc. • Resonance with power factor correction capacitors

—

ACS530 meets EN 61000-3-12 standards, built-in dual DC choke as standard in the full power range.

EU Ecodesign Regulation

The EU has agreed upon new, more demanding regulation (EU) 2019/1781, replacing regulation 640/2009. The new Ecodesign Regulation (EU) 2019/1781 sets the minimum efficiency levels not only for direct-on-line rated low voltage induction motors but now also for variable speed drives with a voltage up to 1000 V. The regulation will be implemented in two steps July 1, 2021 and July 1, 2023.

Variable speed drives

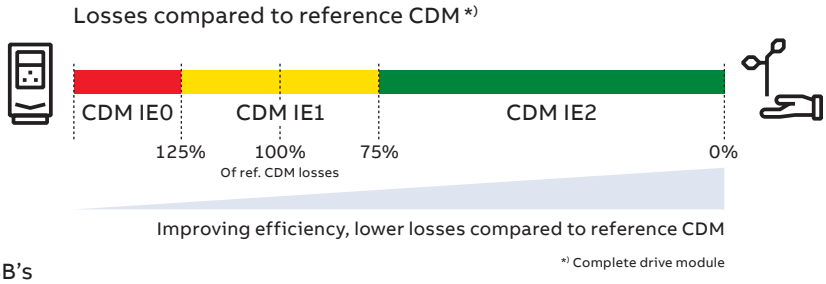

Step 1: July 1, 2021

IE2 efficiency level mandatory for AC drives

- Power range from 0.12 to 1000 kW.
- 3-phase drives with diode rectifier including ABB's micro, machinery, general purpose, industrial and industry-specific drives.
- Drive manufacturers must declare power losses in percentage of the rated apparent output power at 8 different operating points as well as standby losses. The international IE level is given at the nominal point. Drives fulfilling the requirements will be CE marked.
- All the covered ABB products fulfill the requirements.

Excluded from the regulation:

- All drives without CE marking
- Following low voltage AC drives: regenerative drives, low-harmonic drives (THD < 10%), multiple AC-output drives and single-phase drives.
- Drive cabinets with already conformity assessed modules
- Medium voltage drives, DC drives and traction drives

Markings on the ABB AC drives

Unique identifier QR code to Ecodesign information

IE class and % loss of rated apparent power 50 Hz, 400 V

IE2 (90;100) 2,3 %

Unique QR codes are located on the rating plate and/or the front side of the drive.

Step 2: July 1, 2023

No changes for drives from July 1, 2021

For more information, see Ecodesign tool: https://ecodesign.drivesmotors.abb.com/

Drivetune mobile application for wireless access

User-friendly experience with Bluetooth connectivity.

Drivetune mobile app is a powerful tool for performing basic drive startup and troubleshooting tasks. It is possible to connect with drives and access data available in the Internet at the same time. The wireless Bluetooth connectivity means that users do not need to enter hazardous or difficult-to-reach work areas to access information necessary to help them commission and tune the drive.

- Start up, commission and tune your drive and application with full parameter access
- Optimize performance via drive troubleshooting features
- Create and share backups and support packages
- Keep track of drives installed base

ABB Ability™ Mobile Connect for drives is a module in the Drivetune app. It gives you the access to the technical support for fast problem solving. Mobile Connect makes all the necessary data instantly available to the expert, providing support.

Remote and rapid access to ABB's drive experts can save you and your team considerable time, money and headaches. Check Mobile Connect availability in your country.

Download Drivetune

GET IT ON Google play

Available on the App Store

Drivetune for commissioning and managing drives

Our service expertise, your advantage

ABB Motion Services helps customers around the globe by maximizing uptime, extending product life cycle, and enhancing the performance and energy efficiency of electrical motion solutions. We enable innovation and success through digitalization by securely connecting and monitoring our customers' motors and drives, increasing operational uptime, and improving efficiency. We make the difference for our customers and partners every day by keeping their operations running profitably, safely and reliably.

With a service offering tailored to your needs, ABB Motion Services maximizes the uptime and extends the life cycle of your electrical motion solutions, while optimizing their performance and maximizing your energy efficiency gains throughout the entire lifetime of your applications. We help to keep your applications turning profitably, safely and reliably.

Digitalization enables new smart and secured ways to prevent unexpected downtime while optimizing the operation and maintenance of your assets. We securely connect and monitor your motors, drives or your entire powertrain via our easy-to-use cloud service solutions. Connecting your applications also gives you access to our in-depth service domain expertise.

We quickly respond to your service needs. Together with our partners, local field service experts, and service workshop networks, we provide and install original spare parts to help resolve any issues and minimize the impact of unexpected disruptions.

Our tailored to your needs service offerings and digital solutions will enable you to unlock new possibilities. Not only are we your premier supplier of motion equipment, we are your trusted partner and advisor offering support throughout the entire life cycle of your assets. We ensure your operations run profitably, safely and reliably and continue to drive real world results, now and in the future. Our service teams work with you, delivering the expertise needed to keep your world turning while saving energy every day.

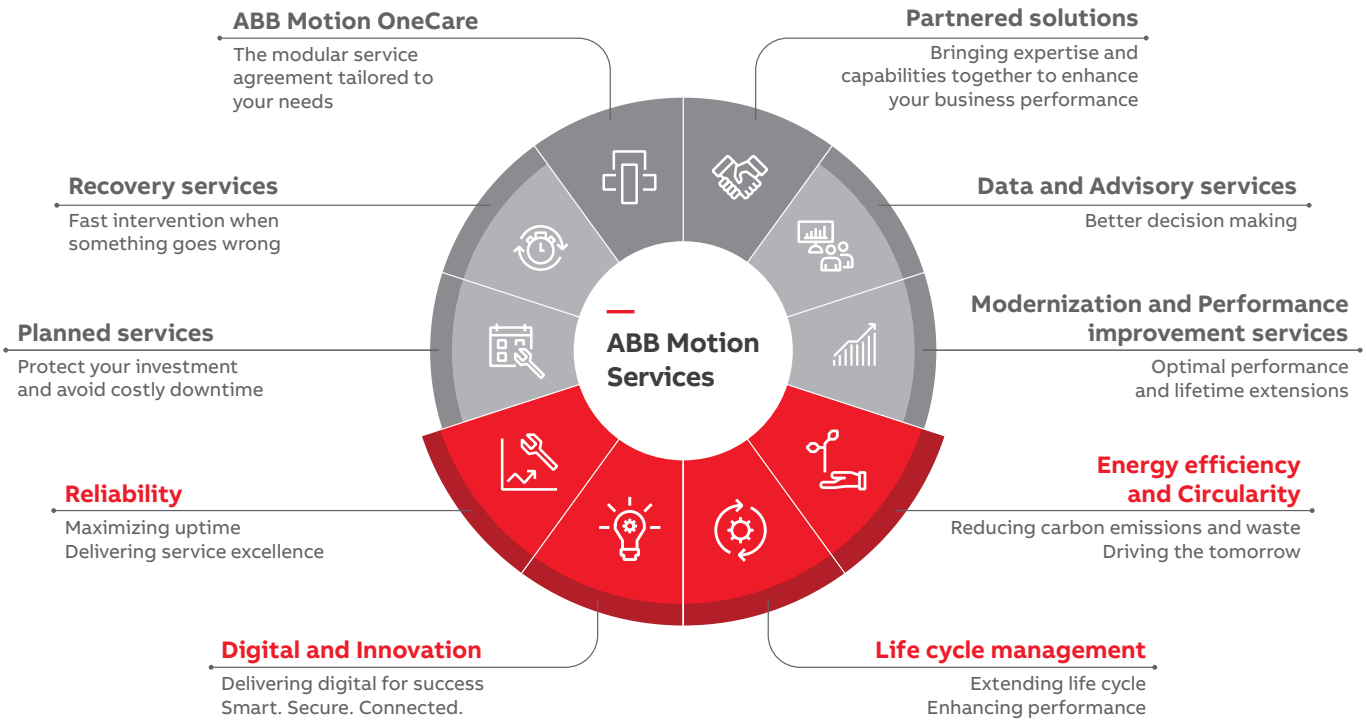

OUR EXPERTISE
YOUR ADVANTAGE

ABB Drives Life Cycle Management
A life time of peak performance

You're in control of every life cycle phase of your drives. At the heart of drive services is a four-phase product life cycle management model. This model defines the services recommended and available throughout drives lifespan.

Now it's easy for you to see the exact service and maintenance available for your drives.

	Active	Classic	Limited	Obsolete
	Full range of life cycle services and support		**Limited range of life cycle services and support**	**Replacement and end-of-life services**
Product	Product is in active sales and manufacturing phase	Serial production has ceased. Product may be available for plant extensions, as a spare or for installed base renewal	Product is no longer available	Product is no longer available
Services	Full range of life cycle services is available	Full range of life cycle services is available. Product enhancements may be available through modernizations	Limited range of life cycle services is available. Spare parts availability is limited to available stock	Replacement and end-of-life services are available

Keeping you informed throughout the life cycle

We notify you every step of the way using life cycle status statements and announcements.

Your benefit is clear information about your drives' status and precise services available. It helps you plan the preferred service actions ahead of time and make sure that continuous support is always available.

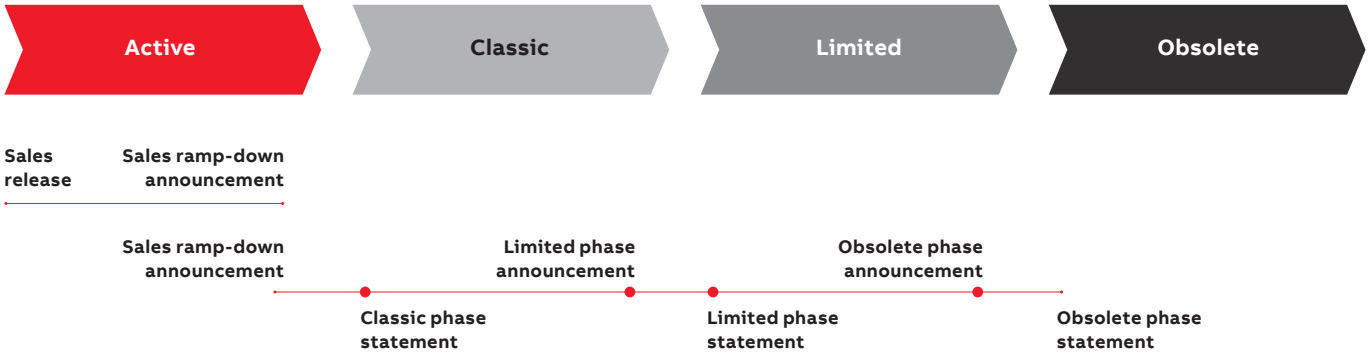

Sales release
Details about product portfolio and release schedule.

Sales ramp down announcement
Last time buy and last deliveries dates, informed well in advance.

Life cycle phase change announcement
Early information about the upcoming life cycle phase change and affects on the service availability. Informed well in advance, minimum six months prior to the change.

Life cycle phase statement
Information about the current life cycle status, product and services availability and recommended actions. Plan for the next life cycle phase transition.

Notes

—

For more information, please contact
your local ABB representative or visit

new.abb.com/drives
new.abb.com/drives/drivespartners
new.abb.com/motors-generators

Online manuals
for the ACS530 drives.

© Copyright 2023 ABB. All rights reserved.
Specifications subject to change without notice.

3AXD10001429518 REV A EN 02.20.2023