INSTALLATION AND OPERATION INSTRUCTION

ConVac vacuum contactor

7.2/12 kV, ...400 A

- Improve efficiency and increase your output
- Optimize investments to reduce your operating costs
- Safe and reliable protection of your electrical equipment

ENGINEERED
TO OUTRUN

ConVac Medium voltage vacuum contactor is applicable in AC power distribution system. It's an ideal solution for controlling motors and switching apparatus requiring a great many hourly operating sequences. ConVac contactors use vacuum interrupters. Thanks to this breaking technique, they provide excellent performance and can operate in extremely harsh environmental conditions.

ConVac is suitable for switching motors, transformers, capacitor banks, switching and power factor correction systems and can be used for a variety of applications in industries, utility, service-providing and shipbuilding sectors, etc.

When equipped with fuses, ConVac can be used for circuits with up to 50 kA fault levels.

Contents

04	**For your safety!**
05	**I. Foreword**
06	**II. Environmental protection program**
06	**III. Application of the X-ray emission standards**
07	**IV. Safety Information**
07	**V. Operator requirements**
07	**VI. Site Commissioning**
08 – 09	**1. Overview**
10	**2. Delivery inspection and acceptance**
11	**3. The loading and unloading**
11	**4. Transportation and storage**
12 – 27	**5. Installation**
28 – 29	**6. Putting into service**
30 – 36	**7. Maintenance**
37	**8. Spare parts and accessories**
38	**9. Product quality and environmental protection**

For your safety!

Please read this manual carefully before installing and using contactor

- Contactor should only be installed indoors where electrical equipment is suitable for work
- Ensure that installation, operation and maintenance are carried out by dedicated electricians
- Must ensure the connection conditions of the electrical equipment on site and the application of the working procedures with security
- All operations related to contactor shall comply with the relevant provisions in the manual

⚠ **Attention**!
Pay special attention to the notes marked with this danger sign in the manual.

- Do not exceed the load specified in the technical parameters of the contactor under normal operating conditions
- The manual should be placed within easy reach of all personnel involved in installation, operation and maintenance
- User's full-time personnel shall be responsible for all matters affecting job safety and properly manage contactor

⚠ **Warning**!

- Always comply with the provisions of the installation manual and safety operating instructions
- high voltage hazard
- Dangerous voltage may cause electric shock and fire
- Power must be cut off before performing any work on the equipment

I. Forward

This instruction is suitable for ConVac series vacuum contactors. In order to use this product correctly, please read this manual carefully.

Similar to our other products, ConVac vacuum contactors are designed for a variety of installations and can be further modified technically and structurally to suit the specific requirements of the customer. Therefore, the information provided in this manual may not include special configuration information.

In addition to this manual, users will often need to consult the latest technical documentation (electrical circuit and wiring diagrams, assembly and installation drawings, interfaces with different integrated relays, etc.), especially in relation to standard structural changes.

Only original spare parts can be used for repair and maintenance. The use of non-original spare parts will result in a significant risk of failure, at which point ABB's warranty and commitment to equipment quality will no longer be valid.

This manual is not meant to cover all details of the construction and specifications, storage and installation of the equipment. Therefore, the following contents may not include instructions on the use of some particular constructions. This does not mean decreasing or reducing our professional technical support and quality service commitment to the installation, commissioning, operation and maintenance of the equipment purchased by users. For more information and support, please contact Xiamen ABB Switches Co., Ltd., or visit the website to obtain:
http://www.abb.com.cn
http://cndmx-tsol.abb.com.cn

⚠	**warning**
	High voltage is dangerous. Possible serious injury or death to the person; Possible damage to equipment or other devices. Power off and ground the equipment before any operation and maintenance. Before installation, operation and maintenance of the equipment, please read and understand this manual carefully. Repair is only allowed by specially trained personnel with detailed knowledge of the equipment. Don’t allow repair equipment with any non-approved accessories; Change the structure of equipment without permission; Or the operation or maintenance of the equipment by untrained and unqualified personnel may result in a serious accident or even serious injury or life-threatening injury, or cause significant damage to the equipment and other facilities. Please carefully follow all safety instructions in this manual.

II. Environmental protection program

ConVac vacuum contactors are manufactured in accordance with ISO 14001 Standards (Guidelines for environmental management) in accordance with the environmental protection standards as to the reduction of energy consumption and the production of waste. All of these benefits from the environmental protection management system of the production process certified by the authority.

III. Application of the X-ray emission standards

The contact of the vacuum arcing chamber is in the open position and may emit X rays when it is subjected to high test voltage, which is one of the physical characteristics of vacuum insulation.

According to the requirements of the relevant standards, the X-ray emitted by the vacuum arc extinguishing chamber shall not exceed the following limits:

- At rated voltage Ur, the amount of X-ray emission is smaller at a distance of 1 m Not more than 5 μSv
- At rated short-time power frequency withstand voltage Ud, distance 1 m, X-rays The emission rate is not more than 150 μSv per hour

The special type test of ABB vacuum arc extinguishing chamber in relevant experimental institutions in Germany proved that the X-ray emission at 10 cm away from the contact surface was less than 1 μSv per hour.

From this it can be concluded that:

- The vacuum arcing chamber is absolutely safe for use under rated voltage
- The switchgear can be safely used under the power frequency withstand voltage value required by GB/T 11022 standard

IV. Safety information

All installation, operation and maintenance must be performed by specially trained personnel who have a detailed understanding of the characteristics of the equipment.

This manual and other necessary information can be provided at any time during the operation

Strictly follow the requirements in this manual.

Verify that safety code standards and installation conditions are met during the installation, operation and maintenance phases.

V. Operator requirements

Check and confirm that the operating parameters of the equipment do not exceed their rated values.

According to this manual and the requirements of the equipment label, the operator must:

- Read this manual carefully and completely
- In-depth knowledge of equipment installation, construction and operation and clear understanding the possible impact of each operation
- Qualified and authorized to comply with safety regulations and local labor standards， and to perform the equipment power on, power off, grounding and check the circuit and other operations
- Qualified and authorized to operate, maintain and repair the equipment
- Have received training on how to properly use protective equipment, such as insulated gloves, safety helmet, goggles, face masks, fireproof clothing, etc. within the scope of safety regulations and local labor standards.
- First aid training

VI. Site Commissioning

ABB has professional after-sales service staff, who can provide quality on-site service, technical guidance and consultation for installation, inspection, overhaul and maintenance of equipment.

1. Overview

ConVac vacuum contactors are electrical switching devices suitable for AC power distribution systems, especially ideal for frequent operation.

The basic composition of contactor:
- Three insulating covers molded in thermoplastic material containing the vacuum interrupter
- Electromagnetic mechanism
- Power control module
- Auxiliary contacts
- Opening and closing status indicator
- Counter
- Mechanical latched kit RiMe (only for mechanical latched type)

In addition to having all the components of a fixed version, a withdrawable contactor also contains:
- Fuse-holder of DIN or BS type fuse according to customer requirements
- Automatic tripping device associated with fuse of each phase
- Truck
- Interlock device to prevent the truck racking-in/out while the contactor closed
- Self-powered VT (when needed)

The basic version of the contactors belonging to the ConVac medium voltage contactor is equipped with a monostable electromagnetic actuator (electrical latching). On request, ConVac can be equipped with a kit which converts the contactor to the mechanically latched type.

1.1 Electromagnetic mechanism

For electrical latched type， when the closing coil is energized by external auxiliary power， the core may produce magnetic field and electromagnetic force, which makes the contactor to close and compresses the opening spring. Once the contactor reaches the closing position, the system minimizes the power supplied to the closing coil only to keep the contactor in the closing position.

When the auxiliary power supply is cut off or the voltage of the auxiliary power supply drops due to human factors (opening command) or non-human factors (fault on the power side), the contactor will release the moving contact under the action of the opening spring, so that the contactor will be opened.

For the mechanical latched type, the closing method is exactly the same as above. After closing, the contactor is kept in the closing position by a mechanical locking device (RiMe).When the contactor got the opening command, the opening coil is powered on, the mechanical locking device is unlocked, so that the contactor will open by the opening spring.

The power module is supplied with wide voltage, and its characteristics are as follows：

Voltage	Inrush current	Holding power
110...125 VDC/AC 50-60 Hz	10.5 A 200 ms	~50 W
220...240 VDC/AC 50-60 Hz	7 A 200 ms	~50 W

Electrical characteristics of mechanical latched device (RiMe)

Voltage	Inrush current	Operation time
24 VDC	40 A	100 ms
48...60 VDC	25 A	100 ms
110...125 VDC/AC 50-60 Hz	10 A	100 ms
220...240 VDC/AC 50-60 Hz	7 A	100 ms

1.2 Available type

The 7.2 kV and 12 kV ConVac vacuum contactors are available in both fixed and withdrawable version.

1.3 Main technical parameters

Technical parameters		Unit	ConVac 7	ConVac 7/P	ConVac 12	ConVac 12/P
Rated voltages (Ur)		kV	7.2		12	
Rated short-duration power frequency withstand voltage (Ud) 50/60 Hz		kV (1 min)	30		42	
Rated lightning impulse withstand voltage (Up)		kV peak	60		75	
Rated frequency (fr)		Hz	50-60		50-60	
Rated operational current (Ie)		A	400		400	
Short-time withstand current Ik		A	4000 X 4 s	6000 X 1 s	4000 X 4 s	6000 X 1 s
Rated peak current (Ip)		kA peak	15.6 (IEC) 10 (GB)		15.6 (IEC) 10 (GB)	
Overload withstand current Ic (1 s)		A	6000		6000	
Overload withstand current Ic (30 s)		A	2400		2400	
Short-circuit breaking capacity		kA	15.6 (IEC) 12.5 (GB)		15.6 (IEC) 12.5 (GB)	
Short circuit making capacity		kAp	12.5		12.5	
Short circuit breaking current (Isc)-combined with fuses		kA	50		50	
Rated short-circuit making current (Ima)-combined with fuses		kA	130		130	
category of use			AC-4		AC-4	
Rated duty		Cycles/hour	1200		1200	
Mechanical life	Electrical latched	Cycles	1,000,000		1,000,000	
	Mechanical latched	Cycles	1,000,000 [2]		1,000,000 [2]	
Opening time	Electrical latched	ms	70...150		70...150	
	Mechanical latched	ms	15...35		15...35	
Closing time		ms	40...70		40...70	
Ultimate performances for back-to-back capacitors banks			C2		C2	
	Rated current	A	250		160	
	Max. transient current of the capacitor	kA	8		8	
	Max. transient frequency of the capacitor	Hz	2500		2500	
Operating temperature		°C	-15...+40 [1]			
Weight [2]		kg	15	50	20	60
Overall dimenstions	H	mm	380	652	405	652
	W	mm	342	530	342	530
	D	mm	231	658	256	658

1) For higher temperature please contact ABB.
2) Mechanical life for mechanical latched: Mechanical locking devices (Rime) should be replaced every 250,000 times.

1.4 Auxiliary contacts

6NO6NC auxiliary contacts are available on the contactor for the customer's use, class 1 (according GB11022-2022 auxiliary contacts.with the following characteristics.

Auxiliary contact class	1
Rated continuous current	10 A
Insulation test voltage	2000 V/1 min 50 Hz
Rated short- time withstand current	100 A/30 ms
Breaking capacity (110 V ≤ Ue ≤ 250 V)	440 W

Breaking capacity in accordance with GB/T 14048.5 standards:

- AC-15 : 220 V 2 A / 110 V 3 A
- DC-13 : 220 V 1 A / 110 V 1.5 A

1.5 Compliance with Standards

ConVac contactors comply with the Standards of the major industrialized countries and in particular with the following standards:
GB/T 14808
IEC 62271-106

1.6 Protection against short-circuit

The value of the short-circuit current at the installation site could exceed the breaking capacity of the contactor. End-user is responsible for protecting the contactor against short circuit through installation of fuses or other means.

⚠ **Fuse replacement must only be carried out by qualified personnel.**

2. Delivery inspection and acceptance

On receipt, immediately check integrity of the packing，confirm if the shipping document is in allegiance with the order.

The accompanying documents in the shipping packing are:

- instruction manual (this document)
- test report
- certificate of qualification
- shipping document

To remove the contactor from the packing, proceed as follows:

- Open the plastic bag
- Remove the contactor, avoiding any kind of mechanical stress to the insulating parts 、contact arms, contact finger and terminals etc.
- Use the special lifting tools for the withdrawable version
- Check the technical parameter of nameplate and make sure to match order confirmation and shipping notification

If product is damaged or does not conform to the order, notify ABB (directly or through the agent or supplier) as soon as possible but no later than five days of receipt. Only valid order information confirmed by ABB at the time of order shall be provided in the package

3. Delivery inspection and acceptance

The following precautions must be taken during contactor handling:

- Keep the contactor in the upright position.
- Make sure that the load is balanced on the truck or on the transport plate/pallet
- Place protective material between the contactor and the truck to avoid any damage or scratches
- Fix the contactor onto the truck or the transport plate/pallet to prevent it moving or overturning
- Avoid excessive speed, sudden starts and stops or sharp changes in direction during contactor handling
- Only lift the contactor enough to avoid any obstacles on the floor
- Take care to avoid any impacts with structures, other apparatus or with personnel when handling the contactor
- Never lift a contactor over an area where personnel are present
- Ensure that no force is applied to insulating parts or terminals of the contactor during handling of the apparatus

3.1 Handling using a lifting or fork-lift truck. (Fig 3a)

3.2 Handling and lifting using a crane

- Insert the lifting plates
- Lift
- Remove the lifting plates after lifting operation finish

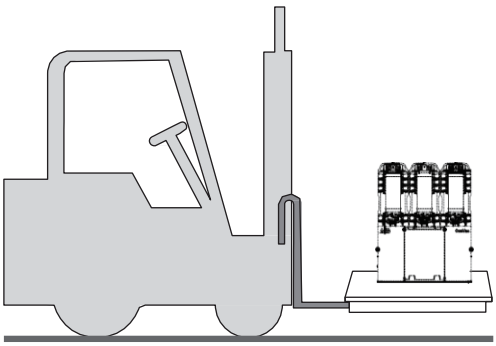

—
Fig 3a

4. Shipping and storage

Place a minimum of one standard packet of desiccant bags inside the packing. Replace the bags approximately every 6 months.

If the original packing no longer be available and immediate installation is not possible, store in a covered, well-ventilated, dry, dust-free, non-corrosive ambient, with a dry atmosphere, away from any flammable materials and at a temperature between -15 °C and +40 °C.

In any case, avoid any accidental impacts or positioning which stresses the structure of the apparatus.

5. Installation

5.1 General
Correct installation is of primary importance. The manufacturer's instructions must be carefully studied and followed. It is good practice to use protecting gloves during installation.

The areas involved in the primary circuits and auxiliary circuits must be protected against access of any animals which might cause damage or disservices.

The contactor enclosure must be installed in a clean, dry and good ventilation place. It must be easily accessible for cleaning and inspection, and must be levelled, placed on the supporting foundations and securely fixed into position.

When the contactor is connected to a capacitive load, make sure that there is a heater to keep the humidity down and of suitable size for the compartment where the contactor is installed. The contactor must always be installed associated with a suitable protection device (e.g.: fuses).

The fixed version of ConVac contactors must be installed by the customer so as to guarantee a minimum degree of protection of IP2X.

5.2 Installation and operating conditions
The following standards must be taken into particular consideration during installation and service:
- GB/T 14808 Alternating-current high-voltage contactor
- GB/T 11022 Common specification for high-voltage switchgear and control-gear standards

5.3 Normal conditions
Follow the recommendations in the GB/T 11022, GB/T 14808, IEC 62271-1 and 62271-106 standards. In more detail:

Ambient temperature:
- Maximum +40°C
- Average maximum over 24 hours +35°C
- Minimum apparatus for indoor installation -15°C

Humidity:
- The average value of the relative humidity, measured for a period longer than 24 hours, must not exceed 95%
- The average value of the water vapor pressure, measured for a period longer than 24 hours, must not exceed 2.2 kPa
- The average value of the relative humidity, measured for a period longer than 1 month, must not exceed 90%
- The average value of the water vapour pressure, measured for a period longer than 1 month, must not exceed 1.8 kPa

Altitude:
≤1000 m.

5.4 Special conditions
>1000 m above sea level.

With the increase of altitude, the insulation performance of air may decrease, thus the impact of external insulation need to be taken into account while using in high altitude areas.

Climate—temperature fluctuations
In order to avoid the risk of erosion and other damages to the product in areas of high-humidity or large temperature fluctuations, necessary measures (for example, fitting a suitable heater) shall be taken to prevent condensation.

For special installation requirements or other operating conditions, please contact ABB.

5.5 Overall dimensions

5.5.1 Fixed version

In any case, avoid pressing the supporting structure of the contactor: if necessary, arrange slots in the fixing area to facilitate correct positioning of the apparatus.

ConVac 7 (GB and IEC)
ConVac 12 (IEC)

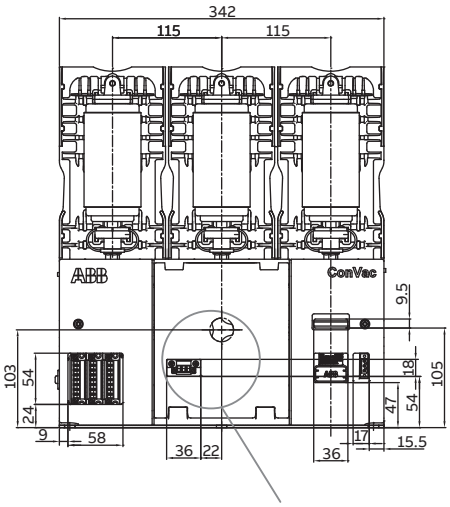

Only for mechanical latched

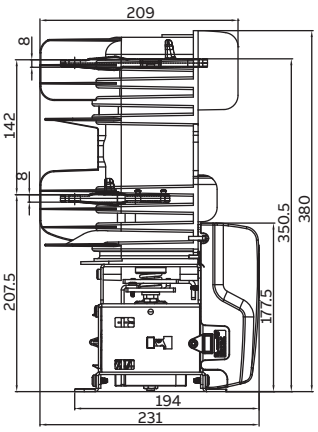

Electrical latched

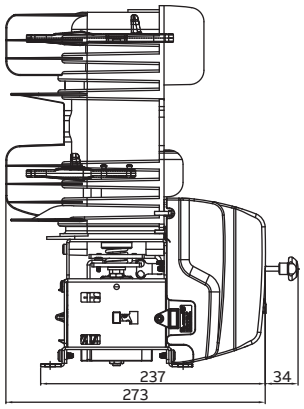

Mechanical latched

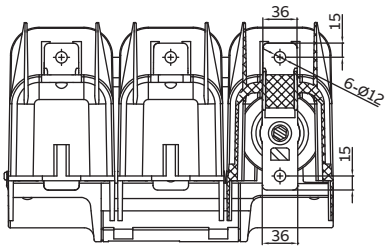

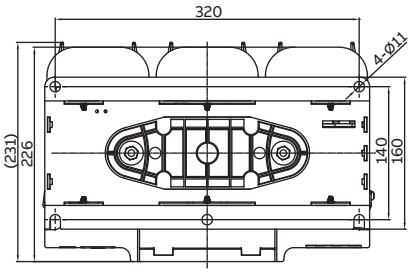

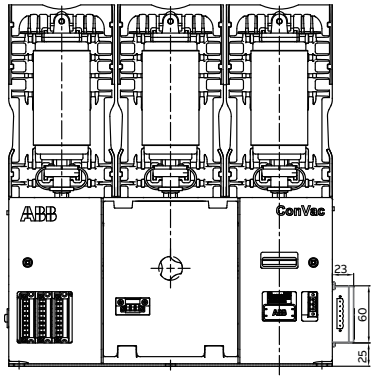

Mechanical latched with anti-pumping

ConVac 12 (GB)

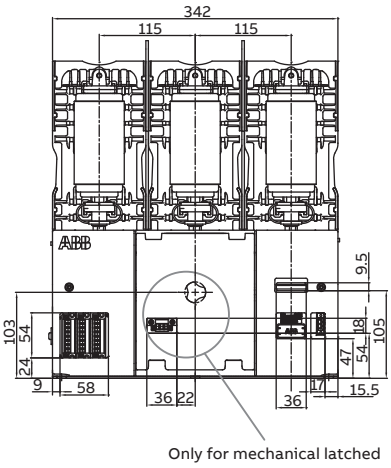

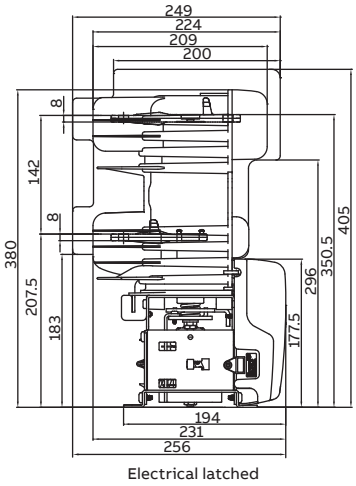

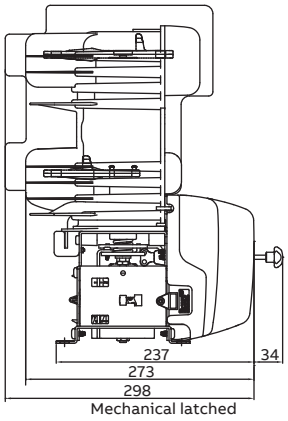

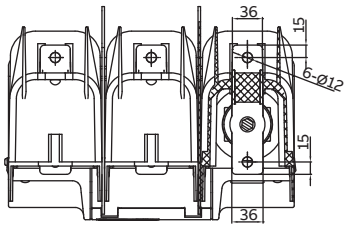

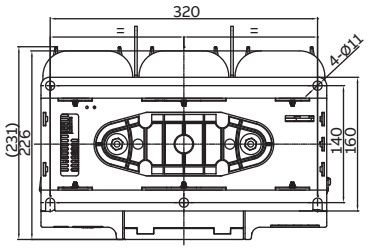

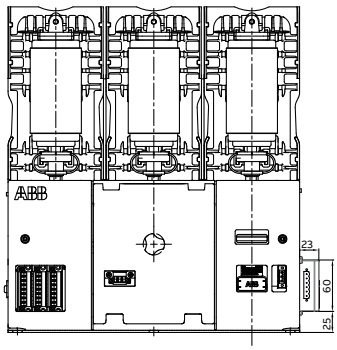

Mechanical latched with anti-pumping

Installation of fixed ConVac contactors
The contactor can be installed in the following positions:

A) Floor-mounted with moving contacts at the bottom.
B) Wall-mounted with moving contacts horizontal and terminals at bottom.
C) Wall-mounted with moving contacts horizontal and terminals at top.
D) Wall-mounted with moving contacts horizontal, interrupters on the front (or rear) and vertical terminals.
E) Ceiling-mounted with moving contacts at top.

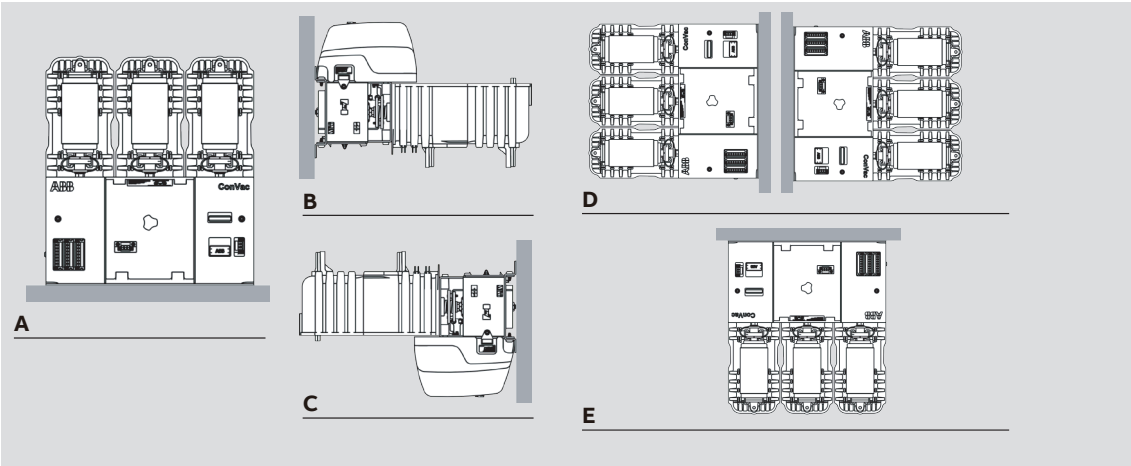

5.5.2 Withdrawable version

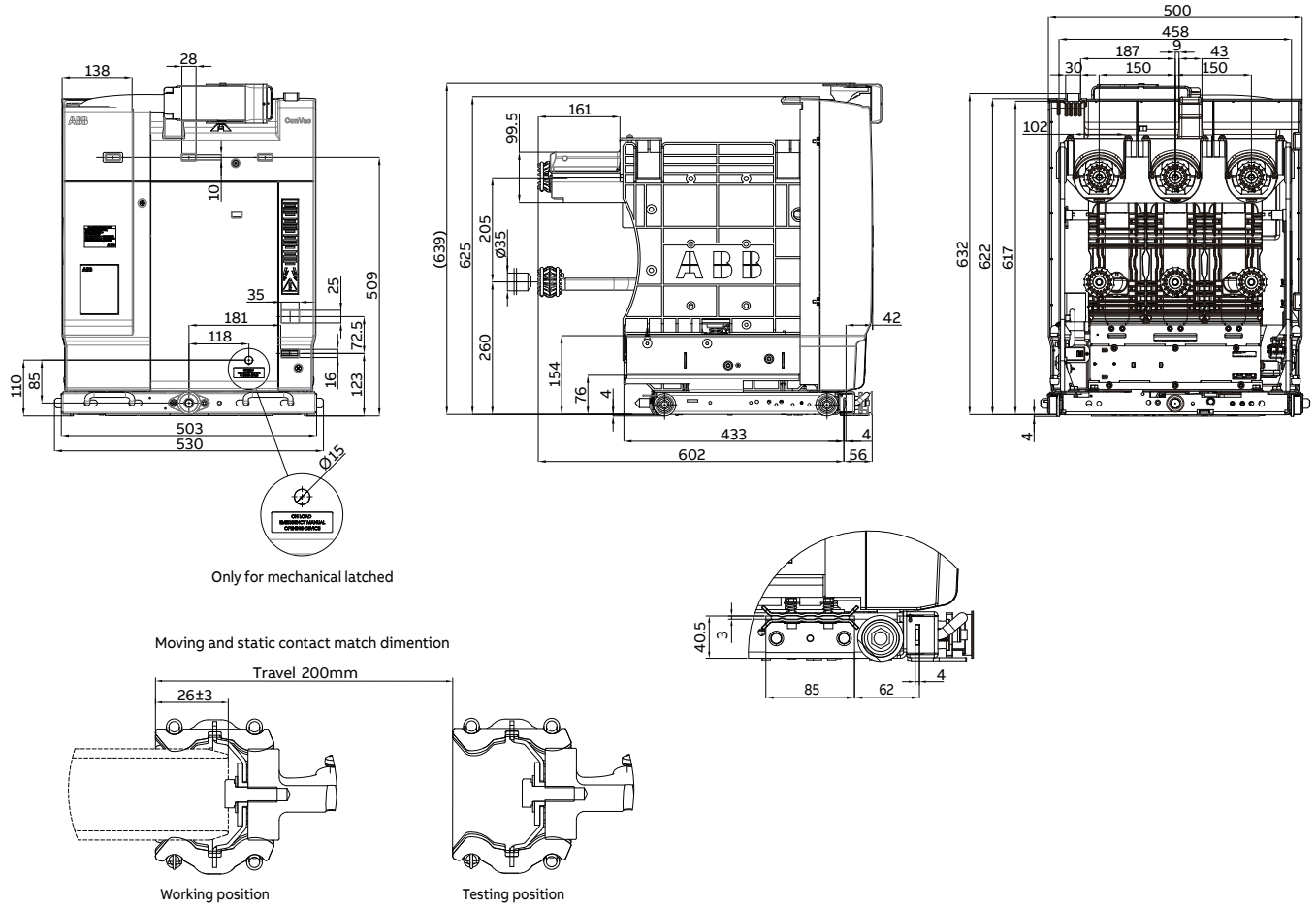

5.6 Wiring diagram

The following standard wiring diagram is for your reference. The actual diagram may differ due to product upgrade or non-standard requirements.

5.6.1 ConVac Fixed version

Electrical latched type

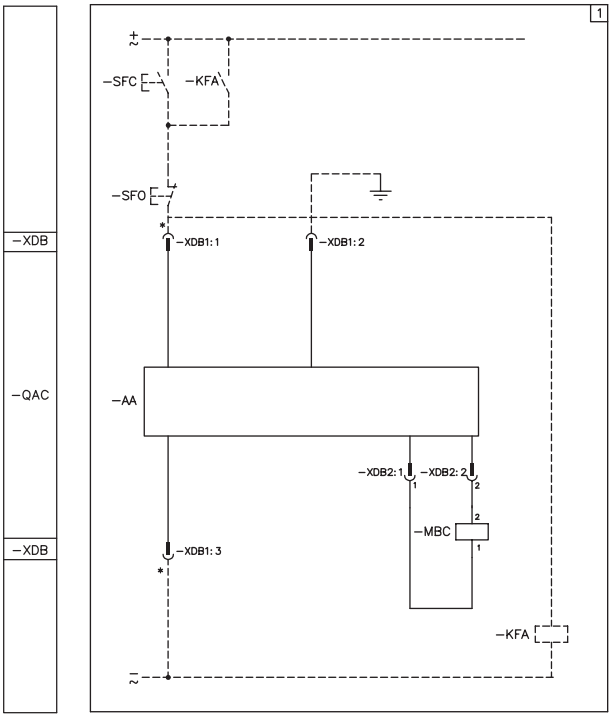

Mechanical latched type

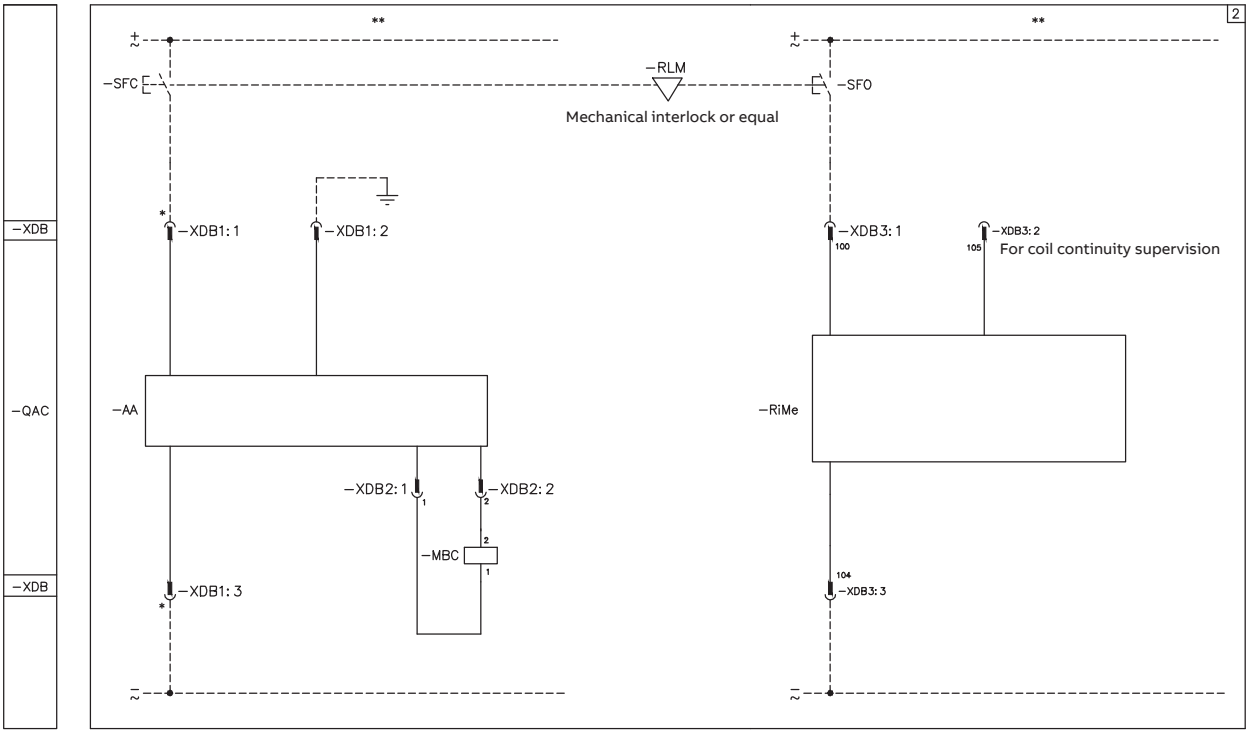

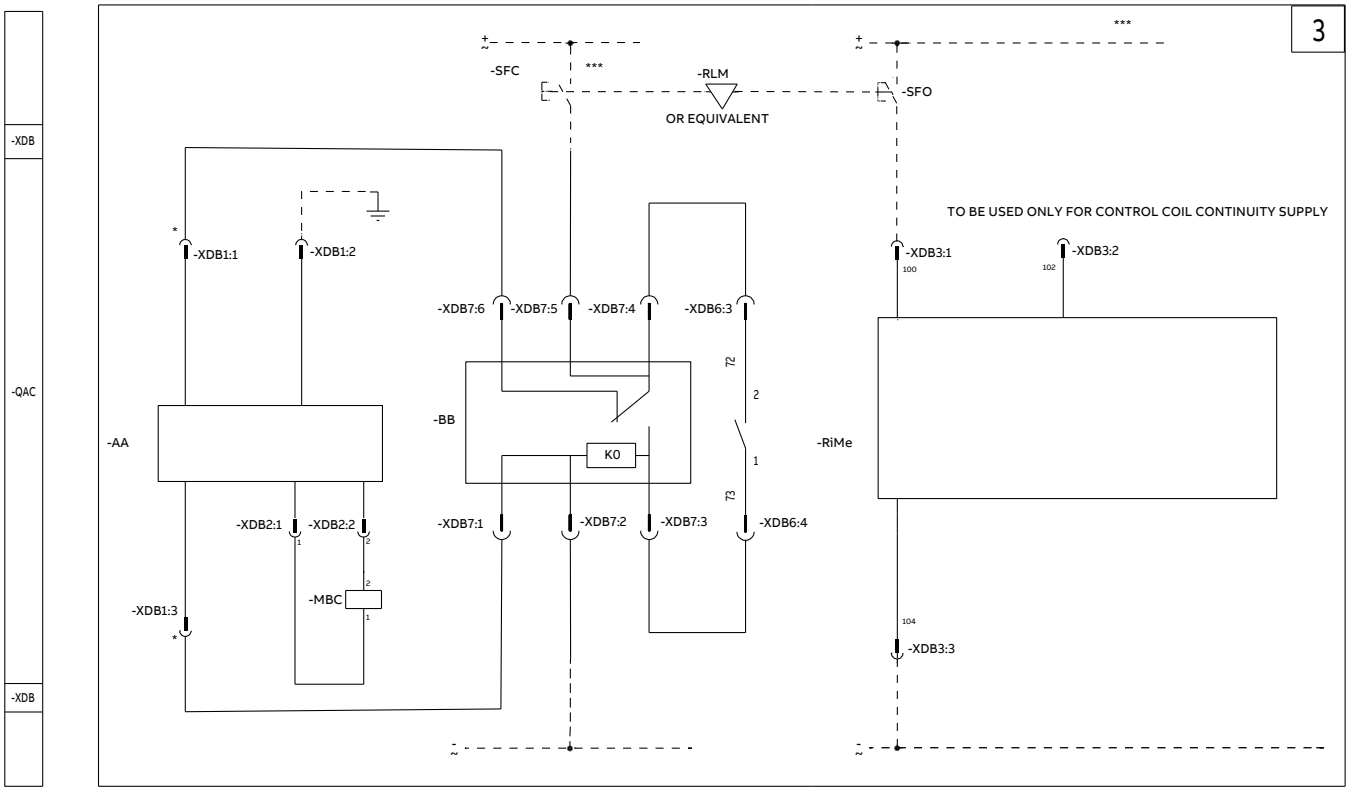
3
-XDB
-QAC
-XDB
-SFC
-RLM
OR EQUIVALENT
-SFO
TO BE USED ONLY FOR CONTROL COIL CONTINUITY SUPPLY
-XDB1:1
-XDB1:2
-XDB3:1
-XDB3:2
-XDB7:6
-XDB7:5
-XDB7:4
-XDB6:3
-AA
-BB
K0
-RiMe
-XDB2:1
-XDB2:2
-XDB7:1
-XDB7:2
-XDB7:3
-XDB6:4
-MBC
-XDB1:3
-XDB3:3

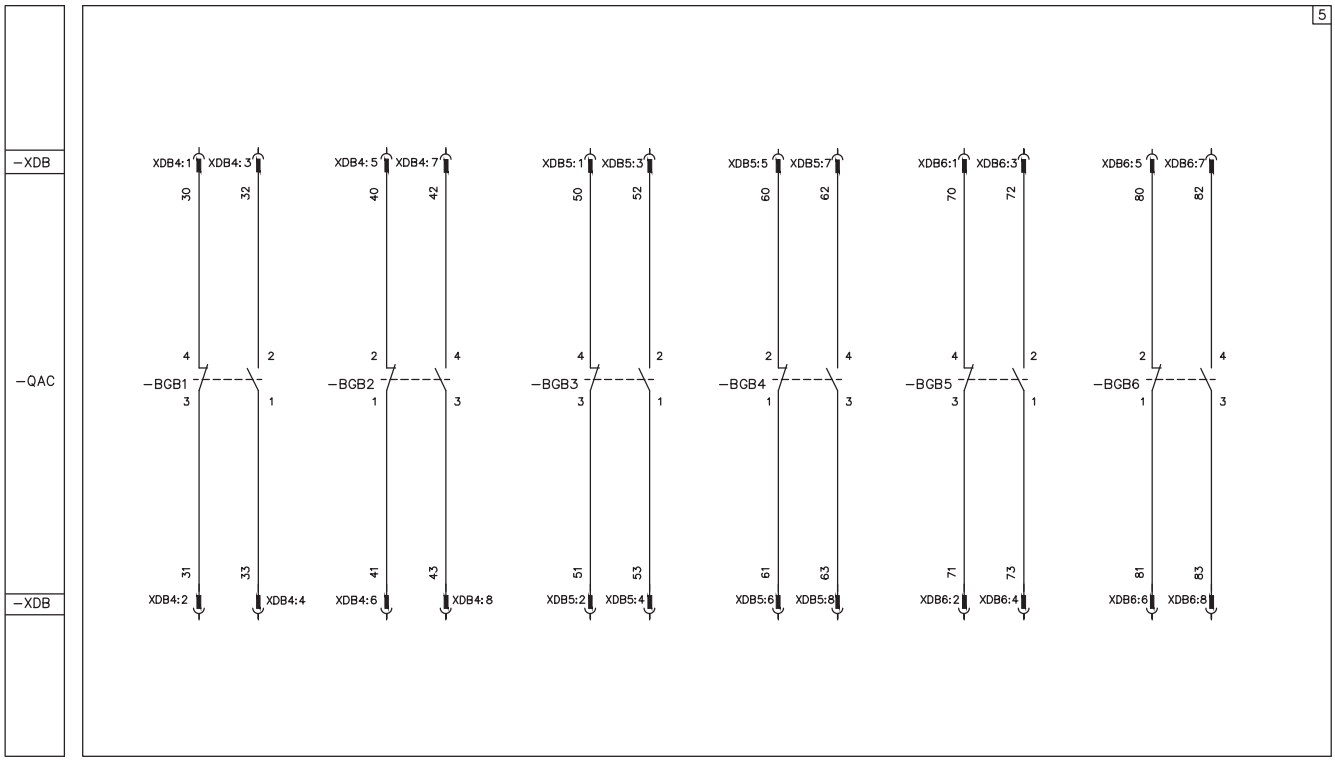
5
-XDB
-QAC
-XDB
-BGB1
-BGB2
-BGB3
-BGB4
-BGB5
-BGB6
XDB4:1
XDB4:3
XDB4:2
XDB4:4
XDB4:5
XDB4:7
XDB4:6
XDB4:8
XDB5:1
XDB5:3
XDB5:2
XDB5:4
XDB5:5
XDB5:7
XDB5:6
XDB5:8
XDB6:1
XDB6:3
XDB6:2
XDB6:4
XDB6:5
XDB6:7
XDB6:6
XDB6:8

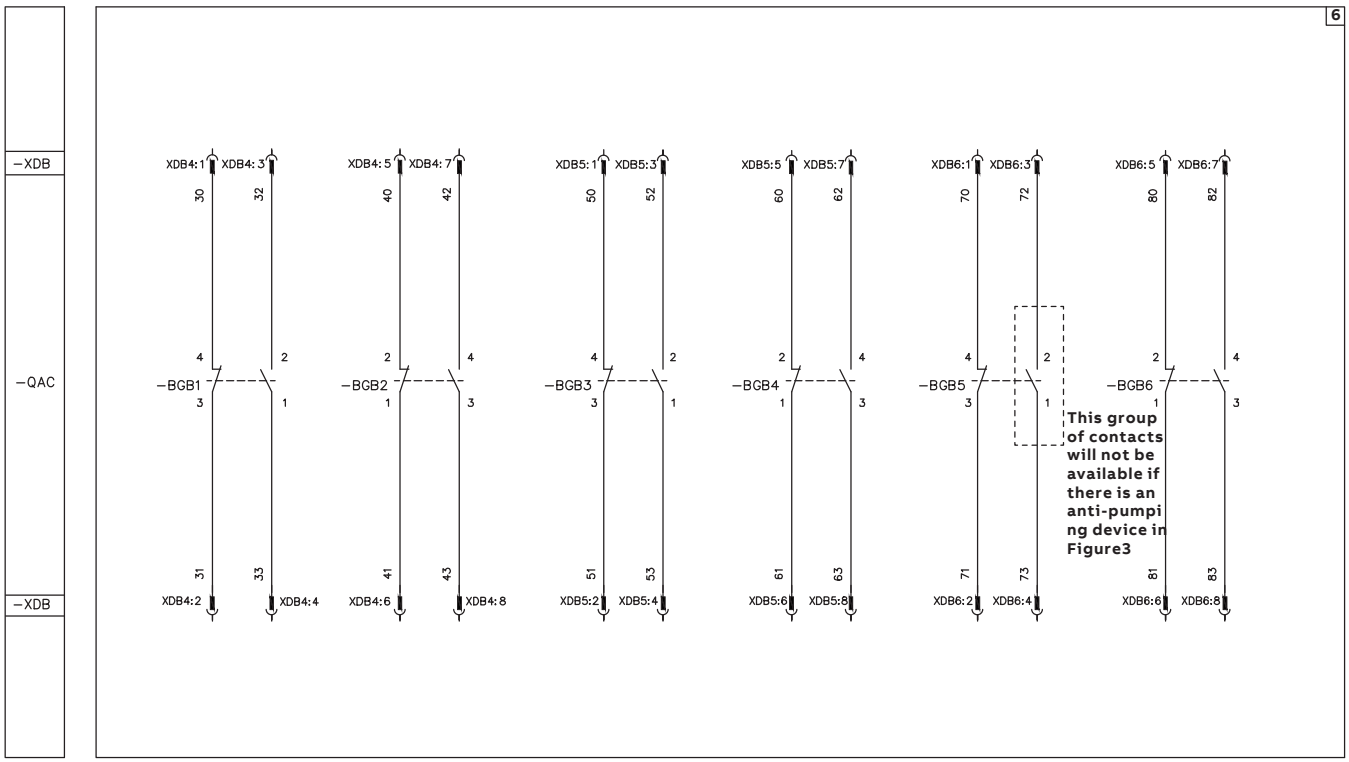

The contactor circuits are illustrated in the diagrams below by way of example. In any case, in view of product upgradation and for specific applications, it is always useful to refer to the electric circuit diagram provided with each piece of apparatus.

Operating state shown

The diagram illustrates the following conditions:

- Contactor open and in working position
- Secondary circuits de-energized

Description of diagram figures

Fig.1	Control circuits of electrical latched contactor
Fig.2	Control circuits of mechanical latched contactor
Fig.3	Mechanical latching with anti-pumping
Fig.5	Auxiliary contacts
Fig.6	Auxiliary contact with anti-pumping

Key symbols

◻	=Reference number of the diagram figure
-XDB...	=Connectors for the contactor circuits
-QAC	=Contactor
-SFC	=Push-button or contact for contactor closing
-SFO	=Push-button or contact for contactor opening
-KFA	=Auxiliary control relay or contactor
-MBC	=Closing coil
-AA	=Power module
-BGB1...6	=Contactor auxiliary contacts
-RLM	=Mechanical interlock (or equal)
-BB	=Anti-pumping device

Notes

A) The contactor is delivered complete with the sole applications specified in the ABB order confirmation. Consult the catalog of the apparatus when making out the order.

B) Control command duration (-SFO and -SFC) at rated voltage Ua Fig. 1 and Fig. 2: -SFC minimun 300 ms, -SFO minimum 300 ms. If you can't meet this time, Please contact ABB.

5.6.2 ConVac/P Withdrawable Version

Electrical latched type

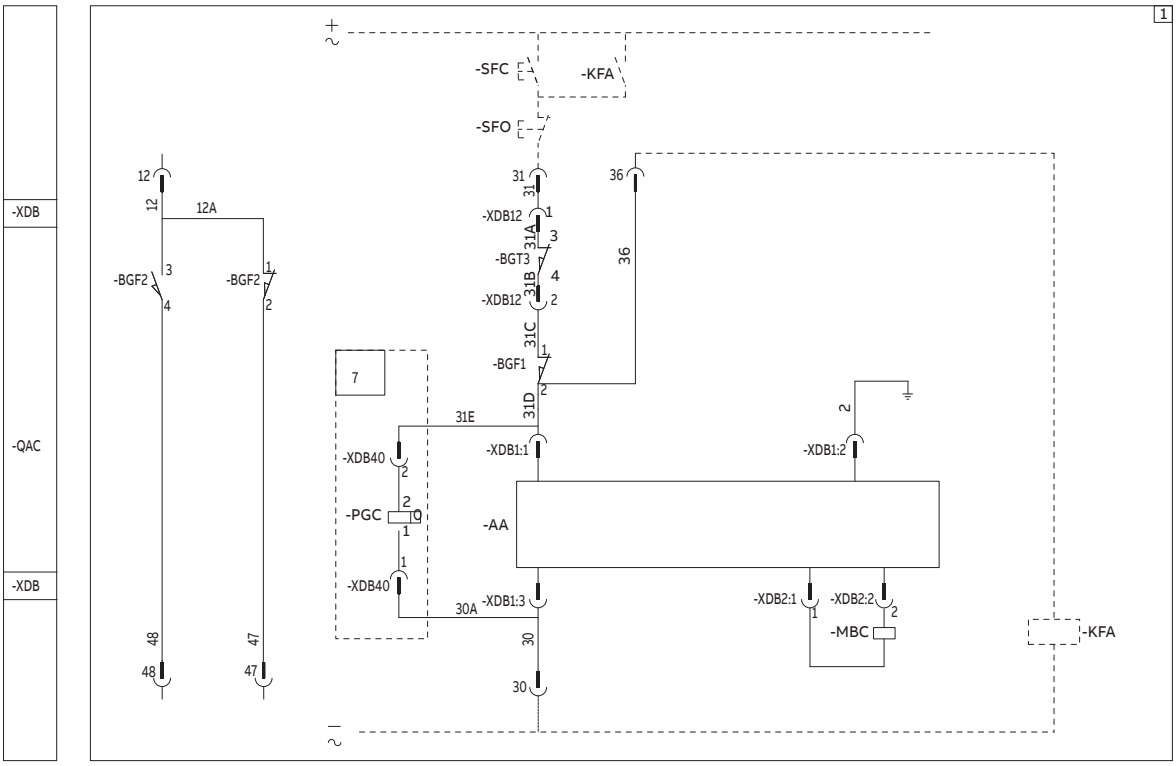

Mechanical latched type

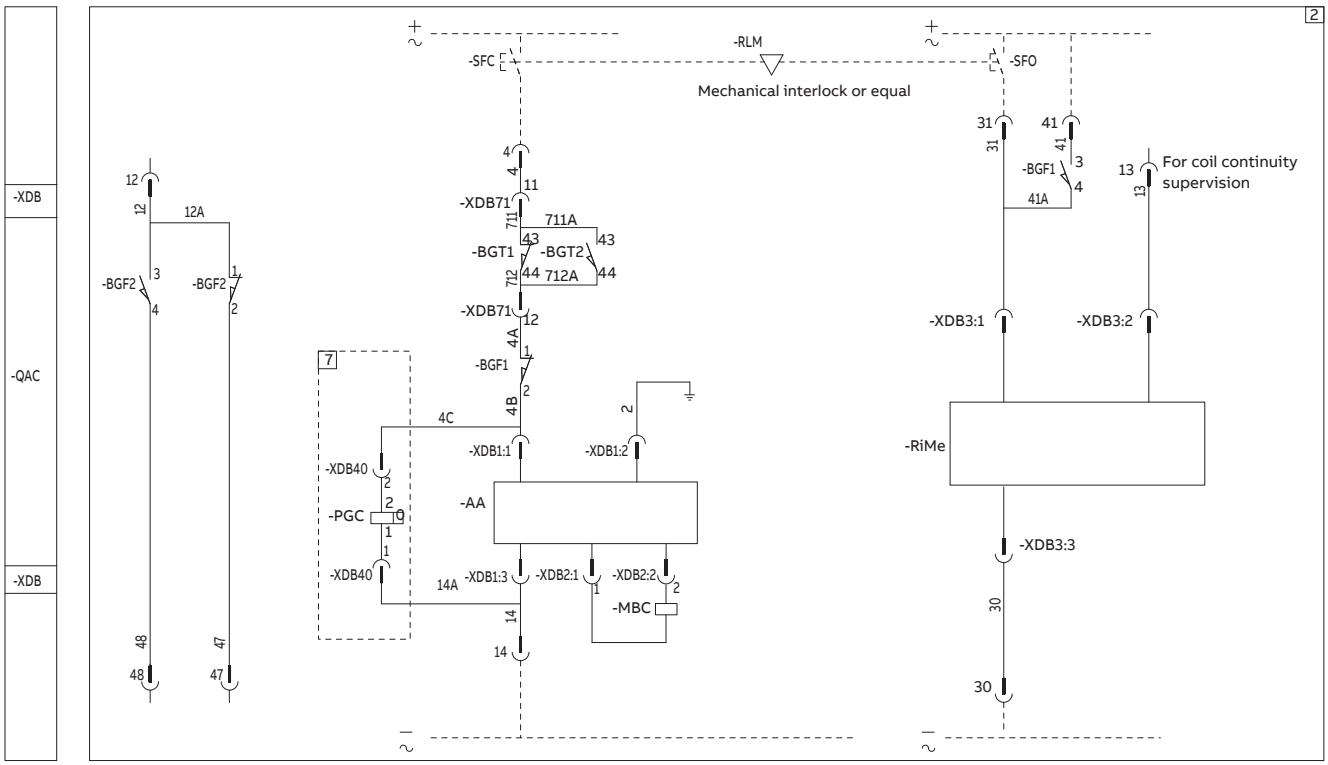

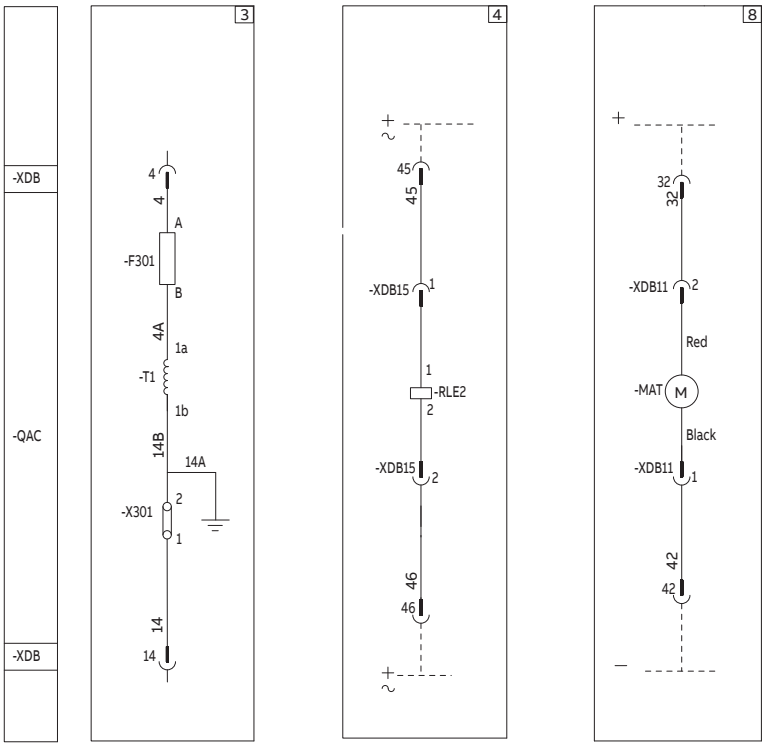
-XDB
-QAC
-XDB
3
4
8
4
4
A
-F301
B
4A
1a
-T1
1b
14B
14A
-X301
2
1
14
14
45
45
-XDB15
1
1
-RLE2
2
-XDB15
2
46
46
32
32
-XDB11
2
Red
-MAT
M
Black
-XDB11
1
42
42

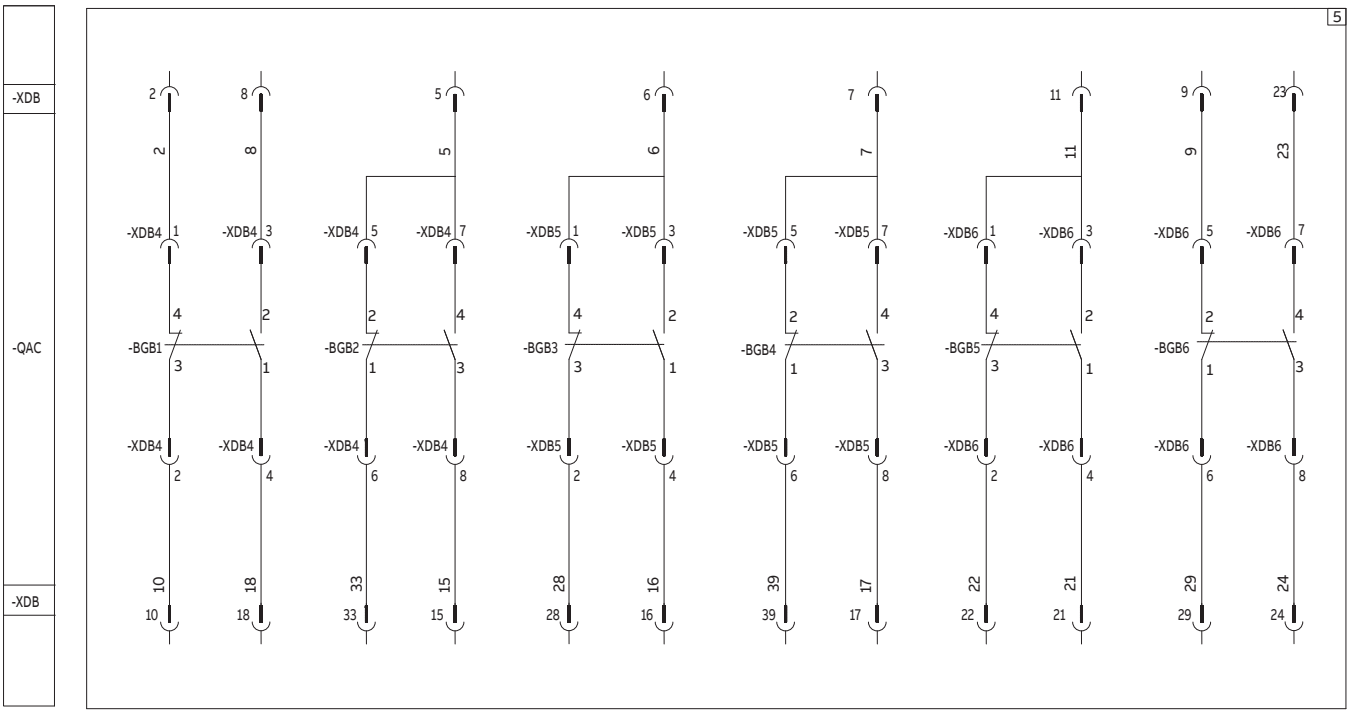
-XDB
-QAC
-XDB
5
-XDB4
-BGB1
-XDB4
-XDB4
-BGB2
-XDB4
-XDB5
-BGB3
-XDB5
-XDB5
-BGB4
-XDB5
-XDB6
-BGB5
-XDB6
-XDB6
-BGB6
-XDB6

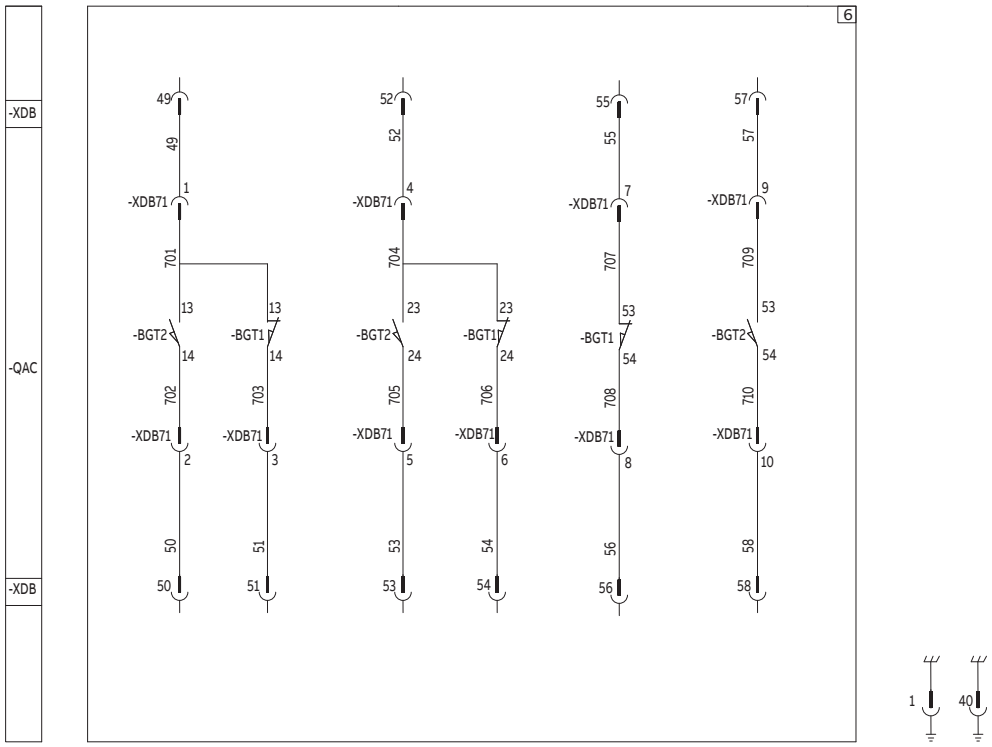
6
-XDB
-QAC
-XDB
-XDB71
-BGT1
-BGT2
49
52
55
57
701
702
703
704
705
706
707
708
709
710
50
51
53
54
56
58
1
40

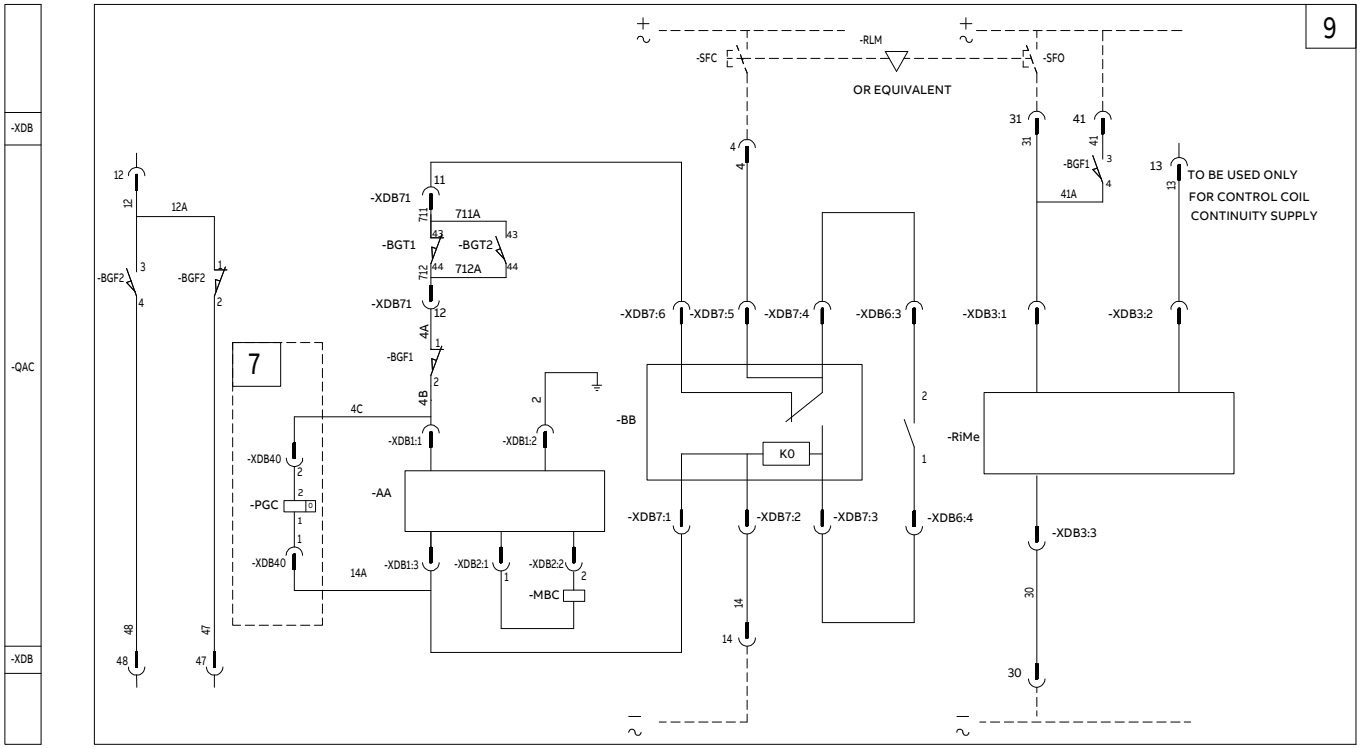
9
-XDB
-QAC
-XDB
-RLM
OR EQUIVALENT
-SFC
-SFO
TO BE USED ONLY
FOR CONTROL COIL
CONTINUITY SUPPLY
-BGF1
-BGF2
-BGT1
-BGT2
-XDB71
711A
712A
12A
41A
7
-XDB40
-PGC
-AA
-BB
-MBC
-RiMe
-XDB1:1
-XDB1:2
-XDB1:3
-XDB2:1
-XDB2:2
-XDB7:1
-XDB7:2
-XDB7:3
-XDB7:4
-XDB7:5
-XDB7:6
-XDB6:3
-XDB6:4
-XDB3:1
-XDB3:2
-XDB3:3
KO
14A
4A
4B
4C

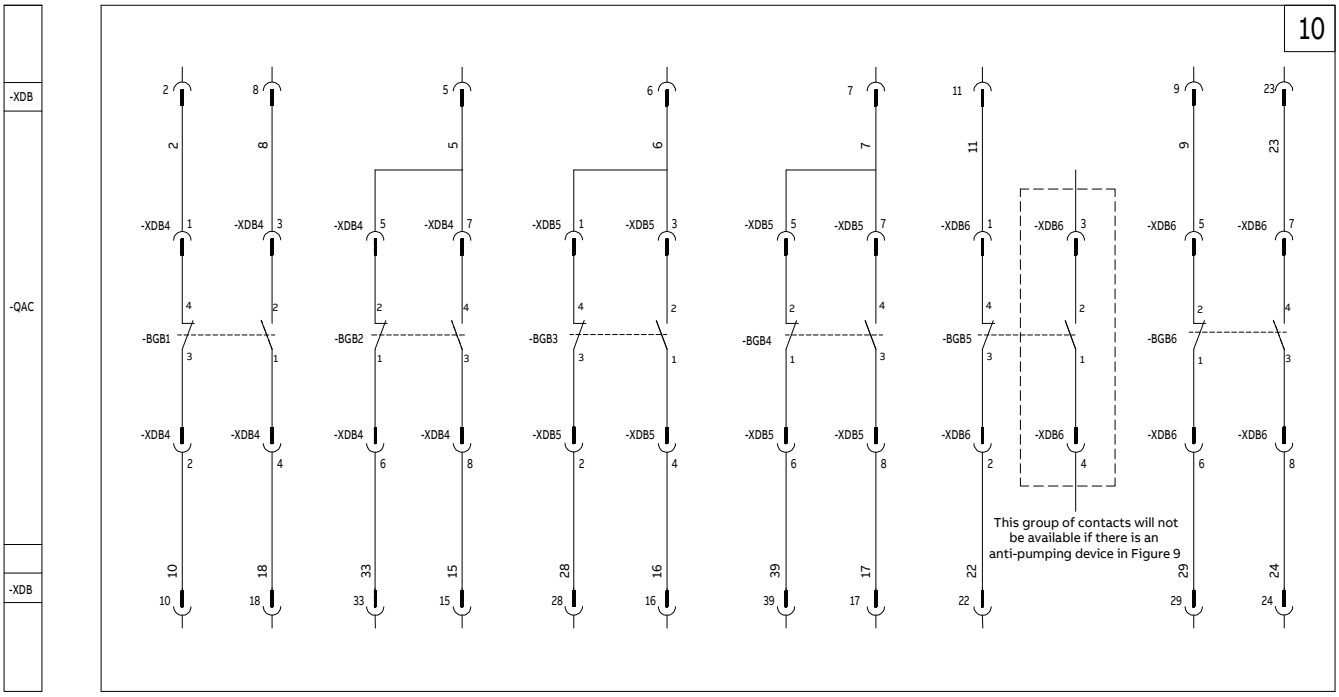
10
-XDB
-QAC
-XDB
-XDB4
-BGB1
-XDB4
-XDB4
-BGB2
-XDB4
-XDB4
-XDB5
-BGB3
-XDB5
-XDB5
-BGB4
-XDB5
-XDB5
-XDB6
-BGB5
-XDB6
-XDB6
-BGB6
-XDB6
-XDB6
-XDB6
-XDB6
This group of contacts will not be available if there is an anti-pumping device in Figure 9

The above is an example of the electrical diagram of the contactor standard circuit of different specifications, which may vary according to product update or engineering non-standard customization.

Operating state shown

The diagram illustrates the following conditions:

- Contactor open and in working position
- Circuits de-energized
- Fuse installed and not blown

Description of diagram figures

Fig.1	Control circuits of electrical latching contactor
Fig.2	Control circuits of mechanical latching contactor
Fig.3	VT Self-supplied circuit
Fig.4	Circuit of locking electromagnet on contactor truck
Fig.5	Auxiliary contacts
Fig.6	Signaling circuit of contactor in the racked-in and isolated position
Fig.7	Electric operation counter
Fig. 8	Electric-drive circuit for truck
Fig.9	Mechanical latched with anti-pumping
Fig.10	Auxiliary contact with anti-pumping

Key symbols

◻	=Reference number of the diagram figure
-XDB...	=Connectors for the contactor circuits
-QAC	=Contactor
-SFC	=Push-button or contact for contactor closing
-SFO	=Push-button or contact for contactor opening
-KFA	=Auxiliary control relay or contactor
-MBC	=Closing coil
-AA	=Power module
-PGC	=Electrical operation counter
-BGF1, -BGF2	=Signaling contact for fuse status
-RiMe	=Mechanical latching device
-BGB1...6	=Contactor auxiliary contacts
-BGT1	=Contacts for electrical signaling of contactor in racked-in position
-BGT2	=Contacts for electrical signaling of contactor in isolated position
-BGT3	=Contacts for electrical signaling of truck status
-RLE2	=Locking magnet, when de-energized it mechanically prevents contactor from racking in or racking out
-T1	=Secondary coil of VT
-F301	=Protection fuse of VT secondary side
-X301	=Connection line
-MAT	=Motorized truck of contactor
-RLM	=Mechanical interlock (or equal)
-BB	=Anti-pumping device

Incompatibility

The circuits indicated by the following figures cannot be supplied at the same time in the same contactor:

1 – 2 2 – 3 4 – 8

Notes

A) The contactor is delivered complete with the sole applications specified in the ABB order confirmation. Consult the catalog of the apparatus when making out the order.

B) Control command duration (-SFO and -SFC) at rated voltage Ua Fig. 1 and Fig. 2: -SFC minimun 300 ms, -SFO minimum 300 ms. If you can't meet this time, Please contact ABB.

5.7 Assembly and connections

5.7.1 Fixed version

⚠	**Warning**
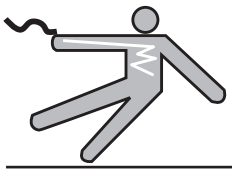	Dangerous voltages. Risk of death, serious injury to people, damage to the apparatus or other objects.

Before carrying out any installation operations:

- Test all the power terminals to check that they are not supplied with voltage. Only use high voltage testing equipment approved for checking the voltage on the power terminals. Do not attempt to measure the high voltage (above 600 V) with a volt-ohm/meter
- Check all the control and secondary circuit terminals with a voltmeter to ensure that all the control and secondary input voltage sources have been turned off
- After de-energizing but before proceeding with any work on the apparatus, confirm that power terminals have been grounded and are in safe conditions
- Carry out all the operations for turning off the voltage and grounding according to the established safety procedures

General inspections

- Clean the insulation surface with a rough dry cloth
- Check that the contact surfaces of the connections are flat, and are free of any burrs, traces of oxidation or deformation caused by drilling or impacts received
- Select the cross-section of the conductors according to the service current and the short-circuit current of the installation
- Prepare special support insulators near the terminals of the contactor, sized according to the electrodynamic forces caused by the short-circuit current of the installation and avoid stressing the connections laterally

ConVac installation and connection of the primary circuit

- Fixed conductors could be installed directly on the support frame, according to the overall dimensions in 5.5.1
- put the connections in contact with the contactor terminals, taking care to avoid mechanical stresses produced, for example, by the conductor busbars on the terminals themselves
- Interpose a spring and a flat washer between the head of the bolt and the connection. The use of bolts according to DIN class 8.8 Standards is recommended, also referring to what is indicated in the table

Bolt	Recommended tightening torque without lubricant
M6	10 Nm
M8	25 Nm
M10	50 Nm
M12	86 Nm

- In the case of cable connections, strictly follow the manufacturer's instructions for making the terminals
- Grounding of fixed ConVac is realized by grounding bolt, accompanied by a grounding sign as Fig 5a shows. An area of about 30 mm around the grounding bolt should be kept clean, reapply Vaseline lubricant to cover the joint after installation. Use cables with a suitable cross-section according to related standards

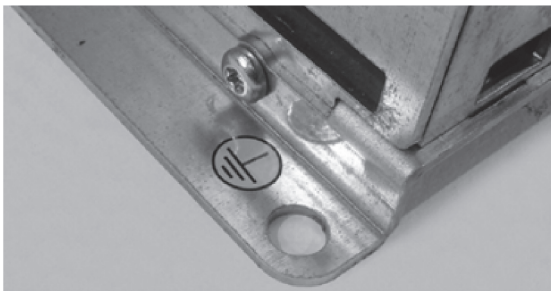

—
Fig 5a

Connection of the auxiliary circuits

- The cables to be used for connection of the auxiliary circuits must no less than the cable used inside the contactor, and be insulated for 2 kV/1 min test
- Please refer to 5.6.1 for the wiring of auxiliary circuit, make sure the cables are reliably connected to the contactor
- Outside, the wires must run through metallic pipes or ducts suitably grounded

5.7.2 Withdrawable version

- The withdrawable contactors are used in the UniGear ZS1 or other switchgear with the same dimension
- Confirm that the contact fingers are clean, and no deformation due to shipping or crash
- The auxiliary circuit connections of withdrawable contactor are derived via the plug. The wiring diagram could refer to chapter 5.6.2
- The cables to be used for connection of the auxiliary circuits must no less than the cable used inside the contactor, and be tested for 2 kV/ 1 min
- three current-limiting fuses (prepared by customers) with high breaking capacity connected in series with the contactor, with dimensions according to
  - DIN 43625 Standard with maximum length e =442 mm

- BS 2692 Standard with maximum distance L =454 mm

5.7.3 Interlock of withdrawable version

- Electrical lock which prevents the contactor from being closed when the truck is not in the racked-in and isolated positions
- Mechanical lock which prevents the contactor from being racked-in and out when it is closed and closing of the contactor when the truck is not in the racked-in and isolated positions
- Electrical lock which prevents closing of the contactor when any one fuse is missing or blown
- Prevents insertion of the plug-socket and make contact closing while it pushing into panel (Fig 5c,interlock of contactors with different rated current)
- Locking electromagnet on the truck to prevent racking-in/out when dis-energised. (Fig 5b-1)
- Mechanical lock which prevents contactor from racking-in if the enclosure door is not closed (Fig 5b-2)
- Mechanical interlock with earthing switch placed on the enclosure： with earthing switch closed the contactor cannot be racked-in and with the contactor racked-in or in intermediate positions between racked-in and isolated, it is not possible to close the earthing switch (Fig 5b-3)

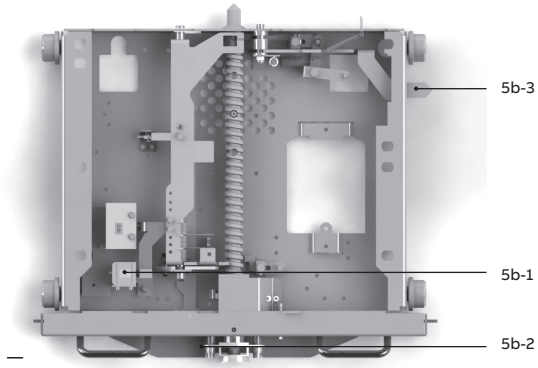

Fig 5b

Fig 5c

5.8 Operation of the Contactors

5.8.1 Two operation modes for ConVac contactor: electrical latching and mechanical latching

Type		Electrical latching	Mechanical latching
Closing	Description	Closing takes place by supplying auxiliary power to the feeder.	Closing takes place when the opening coil is Supplied. Recommend the minimum duration of closing impulse signal is 300 ms, If you can't meet this time, Please contact ABB. Note: a shorter pulse can also CLOSE the contactor or lead to closing followed by immediate opening.
	Inputs	Fixed version: XDB1:1 - XDB1:3, XDB1:2 earthed Withdrawable version: XDB:31 - XDB:30	Fixed version: XDB1:1 - XDB1:3, XDB1:2 earthed Withdrawable version: XDB:4 - XDB:14
Opening	Description	Opening occurs when the auxiliary power is interrupted either intentionally	Opening takes place when the opening coil is supplied. Recommend the minimum duration of opening impulse signal is 300 ms, If you can't meet this time, Please contact ABB.
	Inputs	Fixed version: XDB1:1 - XDB1:3 Withdrawable version: XDB:31 - XDB:30	Fixed version: XDB3:1 - XDB3:3 Control opening coil continuity: -XDB3:2 and –XDB3:3 Withdrawable version: XDB:31 - XDB:30 Control opening coil continuity: -XDB13 and –XDB30 (max 0.3A to avoiduntimely/unwanted opening)

5.8.2 Racking in and out operation (for withdrawable version)

While carrying out the racking-in/out operation of a manual truck, first insert the manual racking-in handle to the right position (Fig 5d), clockwise rotation of the handle will rack-in the contactor to the working position, anti-clockwise rotation of the handle will rack-out the contactor to the testing position.

Operate slowly while racking-in/out the contactor in order to avoid any deformation of the mechanical interlocks. The torque needed to carry out truck handling is < 25 Nm, do not exceed this limit while operating. If there's any difficult during the operation, don't apply hard push, please check if the operation sequence is correct.

The earthing devices installed on both sides of the truck cooperates with the guide rail on the switchgear, guarantees the reliable earthing between the ConVac frame and the main earthing system.

⚠ **Attention!**
The contactor must only be racked into the unit in open position.
While racking-in/out manually, the handle need to turn approximately 20 rounds .

Fig 5d

5.8.3 Withdrawable ConVac with motorized truck

Carry out the racking-in/out test of the motorized truck in the same way as for a manual truck, following the instructions below:

- De-energize the motor power supply circuit, check whether the contactor is in working or testing position, whether the positioning interlock on the truck beam is stuck into the corresponding slot on both sides of the switchgear, if the 2 handles could pull left and right flexibly
- First operate several manual racing-in/out operations with the handle, check if there's any jamming during the operation, if the interlock is in right position
- Check whether the positive and negative polarity of motor power is correct
  a) Rack the contactor to the middle position with the handle
  b) Take out the handle
  c) Supply the truck motor circuit with power
  d) Activate the command for the electrical racking-in/out to check if the moving direction is correct.

Motorized operation

- Supply the motor control system (pay attention to the +/- polarity)
- Check the contactor position sign
- While pulling the contactor out of the switchgear from testing position, make sure that the spindle angle is as the picture below, and check the two handles on the truck could be moved left and right flexibly(if the spindle is not in place, please adjust it manually)

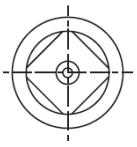

Truck can only be removed from the switchgear when it is in test position and the spindle angle is as this picture

⚠ **Please use the MDC2 or MDC4 provided by ABB as a motor control unit, otherwise the motor might be damaged.**

5.8.4 Emergency opening (Only for mechanical latching)

⚠ **Emergency opening is only allowed by specially trained personnel with detailed knowledge of the equipment.**

For fixed and withdrawable version of mechanical latching ConVac contactor, emergency opening could be realized in manual mode.

For fixed contactor, please apply < 80 N force and <20 mm stroke to pull the mechanical release lever (Fig. 5e) to open the contactor under emergency situations.

For withdrawable version, please use a special tool to apply <100 N force and <35 mm stroke to trigger the emergency opening button on the front cover (Fig 5f), then open the contactor.

To perform the operation above, please reserve operating hole on the switchgear door.

—
Fig 5e

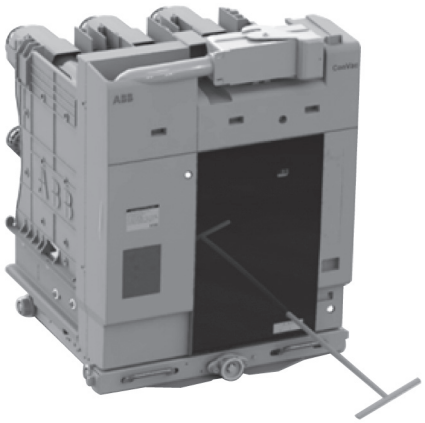

—
Fig 5f

6. Putting into service

6.1 General procedures

⚠ **All the operations regarding putting into service must be carried out by ABB personnel or by suitably qualified customer personnel with in-depth knowledge of the apparatus and of the installation.**

Before putting the apparatus into service, carry out the following operations:

- check that the voltage and current applied are within the specified rated values
- check tightness of the power connections of the fixed contactors and integrity of the isolating contacts of the withdrawable contactors
- carefully clean the sheets and insulating parts with brushes with clean dry cloths
- check the earthing connection of the fixed contactors
- check that no foreign bodies, such as bits of packing, have got into the moving parts
- check that the contactor vacuum interrupter has not been damaged due to accidental impacts
- make sure that all the barriers and protective shields are correctly installed
- carry out the inspections indicated in table 6a

On completion of the operations indicated, check that everything is put back in its original position.

⚠ **The check can only be considered as passed if all the tests indicated have had a positive outcome. In the case of a negative check, do not put the apparatus into service and, if necessary, contact ABB Service.**

Contactors with self-supplied VTs shall pay special attentions to the following items:

- Remove the fuse at the VT primary side while performing the withstand voltage test of the main circuit
- Remove the fuse at the VT primary and secondary side while performing the withstand voltage test of the control circuit
- Only the DC resistance test method is allowed for primary loop resistance testing

Table 6a

Item inspected	Procedure	Positive check
1 Insulation resistance	Medium voltage circuit With a 2500 V megger, measure the insulation resistance between the phases and the exposed conductive part of the circuit.	The insulation resistance should be at least 50 MΩ and remains stable.
2 Auxiliary circuits	Check that the connections to the control circuits are correct: proceed with the relative power supply.	Operations and signals normal. (Replace auxiliary contact after 400.000 OPEN/CLOSE cycles)
3 Drive. Open/closed indicator, operation counter	Carry out a few closing and opening operations of the contactor.	Operations and signals normal.
4 Fuse connections, fuse protectors	Check if the screws are fastened, and the snap spring and fuse protectors are installed correctly	Assembling and protector status all correct
5 truck operation and interlocks	Execute several racking-in/out operations Execute several close/open operations Check the compliance of operation logic with clause 5.7.3	Operations and status normal
6 VT primary/secondary protection fuse	Check the fuse at primary side	Operations and status normal

6.2 Factory acceptance test with self-supplied VT

Attention
During factory acceptance test, auxiliary circuit should be supplied with another independent power source.

While performing withstand voltage test, guarantee that VT secondary side has been effectively grounded. Withstand voltage test between phase A and phase C is forbidden unless when the fuse has been removed.

Make sure to reinstall the fuses after the test.

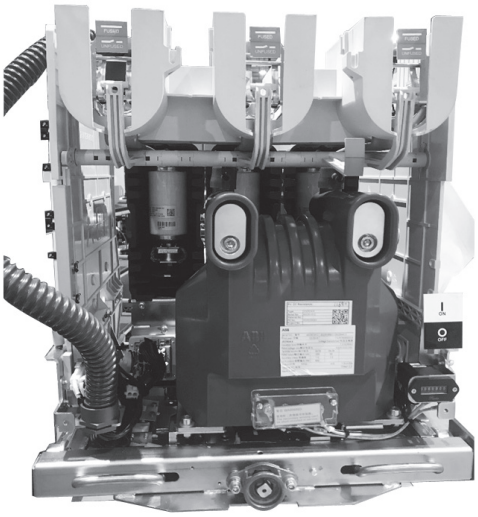

Fig 6b

7. Maintenance

Maintenance operations are aimed at ensuring trouble-free operation of the apparatus for the longest possible time.

In general, the three following operations must be carried out for maintenance:
Inspection: Assessment of the actual conditions
Servicing: Measures to be taken to maintain the specified conditions
Repairs: Measures to be taken to restore the specified conditions

7.1 General
Due to the simplified structure and the high reliability of ConVac product, it has a long service life. During the entire service life, ConVac need very less maintenance, especially the critical part - Vacuum interrupter – is maintenance free.

The maintenance is related to the wearing and aging condition of the components, the time interval and the scope of maintenance will depend on various of factors such as working environment, operation frequency, service time, etc.

Maintenance must only be carried out by ABB personnel or by suitably qualified personnel with appropriate training, and must follow other related standards or regulations, such as assembling process regulations.

Highly recommend to ask ABB service engineers to take charge of the maintenance and repairment tasks.

Before performing any maintenance operations, make sure the contactor is at open position, and all the power sources disconnected (including main circuit and auxiliary circuit) with no risk of power re-supply during the maintenance.

7.2 Inspection

7.2.1 General requirements before inspection
The recommended inspection period at normal condition is 1 year or 50,000 operations, whichever comes earlier.

When there are unusual service conditions (including adverse climatic conditions) and/or in the case of environmental pollution (e.g. heavy contamination or an atmosphere with aggressive agents), the frequency of inspections must be increased.

Visual inspection of the equipment surface for contamination, dampness, corrosion and discharge. Detailed items please refer to table 7a

In case of any abnormal conditions, it is necessary to be considered for maintenance or repair.

Table 7a

Inspected items	Interval	Operation to be carried out
1 Insulating parts	1 year	Visual inspection of the insulating parts. The insulating parts must be free of any accumulation of dust, humidity, dirt (clean if dirty), cracks, traces of surface discharges or damage.
2 Nuts and bolts	1 year or 50,000 operations	Check whether the nuts and bolts are tightened and in the correct position (pay special attention to the moving parts and force-bearing parts)，The tightening torque of the nuts and bolts has been marked with color.
3 lubrication of the moving parts	1 year or 50,000 operations	Visual inspection，NB52 lubricating grease from KLUBER company is recommended.
4 Auxiliary contacts	1 year or 50,000 operations	Check correct operation and the signals. Check that there are no burnt or worn contacts (if so, please replace)
5 Tulips and fuse holder	1 year or 50,000 operations	Visual inspection of the main contacts. The contact areas must be cleaned if the surface is discolored, please clean and guarantee the lubrication of the surface. Recommend to turn the tulip regularly.
6 Mechanical interlock	1 year or 50,000 operations	When the contactor is at open/close position, and during closing and opening operations, check the correctness of mechanical interlocks.
7 Emergency opening device	1 year or 50,000 operations	While contactor is at Close position, use emergency opening device to trip the contactor for several times.
8 Vaccum interrupter	1 year or 50,000 operations	Please refer to chapter 7.2.2

7.2.2 Checking the vacuum interrupter
Vacuum interrupter is maintenance free, Should it become necessary for extraordinary maintenance, first check if there are any dust, dirt (clean if dirty), cracks(replace), and other damages due to dischargement.

As Fig 7b shows， As the contacts wear, the overrun distance “M” decreases. When distance “M” of any pole goes below 1 mm with the contactor in the closed position, all the sub-assemblies must be replaced.

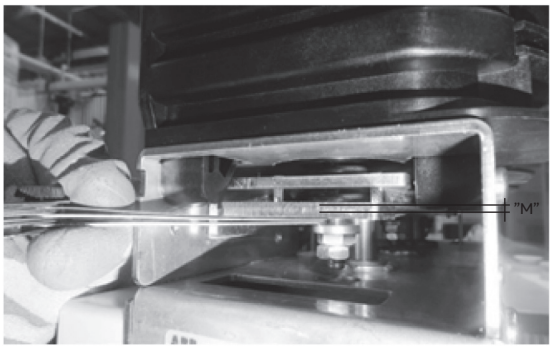

—
Fig 7b

Caution
Never attempt to adjust the nuts of the vacuum interrupters for any reason whatsoever. The overrun distance must be checked, but not adjusted.

7.3 Maintenance

7.3.1 General requirements
Under normal working conditions, the recommended maintenance period is the 2、4、7、10、13、16、18、20 years after the contactor has been put into service. For harsh environment, frequent operation and when the customers’ requirements on switchgear is very high, the maintenance period should be appropriately shortened.

7.3.2 Surface cleaning
If the contactor surface need to be cleaned according to the inspection in chapter 7.2, please follow the steps below:

- Before cleaning, the working area must be segregated in accordance with relevant regulations and take necessary security measures to prevent maloperation
- General surface cleaning. Clean dusts and dirt with a very fine grain emery cloth; For the stains which are difficult to remove, use weak alkaline cleaning agent or safe cleaning agent, pay attention that the cleaning agent is suitable for plastic and synthetic rubber materials, do not use carbon tetrachloride or trichloroethylene and other cleaning agents to clean
- Cleaning of conductors and insulators surface. For dirt that is easy to remove, use safe cleaning agent; For those not easy to remove, use low-temperature cleaner. After cleaning, carefully wipe away the detergent with an alcohol-stained cloth and dry it

7.3.3 Checking the degree of vacuum of the interrupter
The vacuum interrupter is free of maintenance before reaching the maximum operation cycles. After 20 years of storage, recommend to sampling inspect the degree of vacuum of the interrupter.

⚠ **While reassembly, appropriate adjustments are necessary. Disassembly and replacement of the contactor vacuum arching chamber shall be performed by ABB service engineers.**

Carry out the test on the interrupter without dismantling it from the contactor and use the VIDAR tester, manufactured by Programma Electric GmbH, Bad Homberg v.d.H. company, for the vacuum test.

The following test values applies:

Contactor rated voltage	DC test voltage
7.2 kV	25 kV
12 kV	40 kV

The test must always be carried out with the contactor open, with the contacts at the nominal distance.

Procedure for testing the vacuum of the interrupter of the contactor poles:

- Turn off the power and make sure the working area safety and comply with GB or related safety regulation requirements
- Connect a terminal of each contactor pole to the ground
- Connect the ground terminal of the VIDAR tester to structure of the contactor;
- Connect the high voltage terminal of the VIDAR tester to the terminal which is not connected to ground of the contactor pole (phase L1) and carry out the test. Repeat the test for phases L2 and L3

Caution
The tester connection cables can produce an indication due to capacitive effect. In this case, the cables must not be removed.

7.3.4 Other regular maintenance items
In spite of the items in chapter 7.3.1~7.3.3, the maintenance in the table below should be considered as well:

Item	Description
1	Inspection and maintenance of the tulip
2	Inspection and maintenance of the contact arm
3	Inspection and maintenance of the fuse and fuse holder
4	Inspection and maintenance of the actuating element
5	Inspection and maintenance of the fuse automatic trip strike
6	Inspection and maintenance of the over-travel of the contactor
7	Inspection and maintenance of the plugs and pins
8	Inspection and maintenance of the auxiliary circuit
9	Inspection of the power control module
10	Inspection and maintenance of the operating mechanism
11	Inspection and maintenance of the contactor truck
12	Short-time withstand voltage test
13	Insulation resistance test
14	Main circuit resistance test (fuse excluded)
15	Contactor closing, opening and transmission test
16	Operation voltage test of the contactor
17	Mechanical characters test

7.3.5 maintenance following a short-circuit or overload

It is foreseen that the ConVac contactor be protected by fuses and/or by a circuit-breaker. In any case, the value of a short-circuit can exceed the threshold of damage to the vacuum interrupters.

After interruption of a maximum short-circuit of the contactor, inspect all the components and carry out the repairments or replacements necessary before putting the Contactor back into service.

Vacuum interrupters
if there is no physical stress and the distance M exceeds a minimum of 1mm, the interrupters need to pass a dialectical test before putting into service.

Enclosures
External evidence of deformation of the enclosure is usually indicative of damage inside it. Extensive damage will require replacement of the enclosure parts and of the apparatus contained in it.

Terminals and internal conductors
Replace the damaged parts which show discoloration, melting or damage caused by electric arcs. Pay special attention to the moving parts.

7.4 Repairs

Repairs are necessary if any abnormal signs are sportified during inspection or maintenance.

Replacement with spare parts and accessories must only be carried out by ABB personnel or by suitably qualified personnel with appropriate training.

All the power supply sources must be turned off and Always work with the contactor open with the work area insulated and keep safe.

Should maintenance be carried out by the customer's personnel, responsibility for the interventions lies with the customer.

While replacing the components which are not included in the spare part list (as chapter 8), the repair task should be carried out by ABB service engineers. Especially:
- Vacuum interrupter and accessories
- Fuse holder
- Operation mechanism
- Truck

7.5 Dismantling and replacing fuses

7.5.1 General requirements

Attention

- All the operations described below must be carried out by suitably qualified personnel with in-depth knowledge of the apparatus
- Do not rack the contactor out unless the enclosure is securely fixed in the switchgear or to a stable base
- Check that the contactor is open before proceeding with isolation and its racking-out from the enclosure

The fuse holder is preset for installation of fuses with the dimensions and average type of striker according to DIN Standard and BS Standard.

The fuse holder is always fitted with an automatic opening device for a fuse blowing. This device prevents contactor closing when even a single fuse is missing.

7.5.2 Preliminary operations for fuse replacement

The contactor must be racked out of the enclosure for replacement of the fuses. Remove the screw on the left side of the front cover, remove 4 screws and gaskets as Fig 7c and 7d shows.

Pull the plug out through the window at the bottom of the front panel (see Fig 7d) then remove the front panel.

—
Fig 7c

—
Fig 7d

7.5.3 Fuses of DIN Standards replacement

- Mounting the adapters（Fig 7e）
  The fuse holder is designed to take fuses with a length of 442 mm. For smaller sizes, two adapters are required:
  - Adapter (45) for fuses with a length of 192 mm (A)
  - Adapter (46) for fuses with a length of 292 mm (B)

Select the type of adapter in relation to the type of fuse to be used, and insert it fully over the fuse contact, opposite to the one of the striker. Tighten the steel band and fully tighten the screw, the torque is 10 Nm. To dismantle, proceed in reverse order.

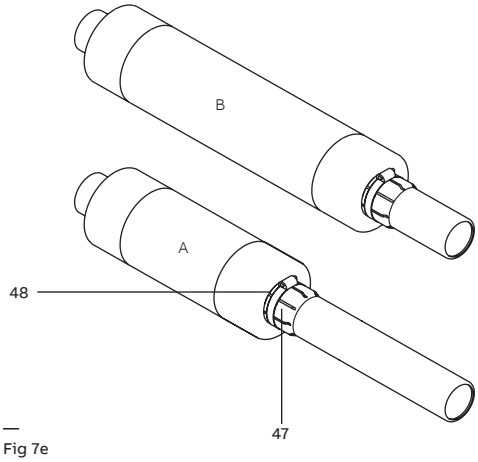

—
Fig 7e

- Dismantling the fuses
  - Remove the plastic housing (Fig 7f)，for 12 kV contactors, unfasten the screws on the plastic housing first
  - Open the locking rings，moving them in the direction shown by the arrows using the tool (Fig 7g), and remove the fuse using the special tool
  - Use that special tool to pull one side of the fuse from the holder (Fig 7h)
  - Finally completely take the fuse out from the holder (Fig 7i)

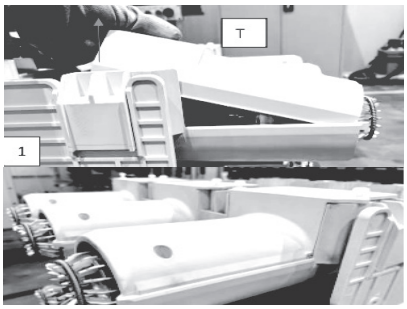

—
Fig 7f

Fig 7g

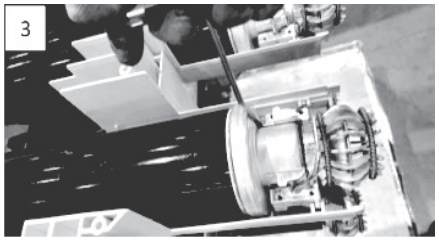

Fig 7h

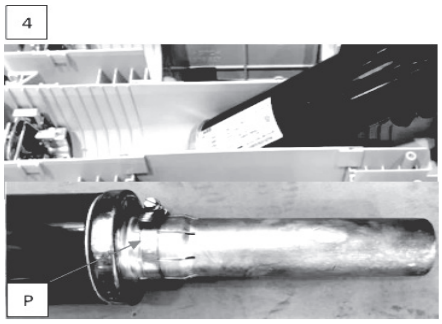

Fig 7i

- Mounting the fuses
  - Check the locking rings in open position (Fig 7j).
  - Push the fuse indication plate down to bottom, Pay special attention to push only the steel parts, not the plastic parts (Fig 7k).
  - In the meantime fully insert the fuses into fuse contacts on the opposite side to the tulip contacts of the contactor, make sure fuses blocking the fuse indication plate in the bottom position (Fig 7l).
  - Press the fuses fully into contacts on the side of tulip contacts of the contactor (Fig 7m).
  - Close the locking rings (R) on striker side and isolating contacts side (Fig 7n).
  - Mount the plastic cover back to fuse holder on the isolating contacts side, and make sure the clips of plastic cover locked with fuse holder correctly, for 12 kV screwing 4pcs bolts of fuse cover finally (Fig 7o).

Finally check the fuse status indicator on the panel, when the fuse are not installed or not appropriate installed, the indicator shows red(Fig 7p).

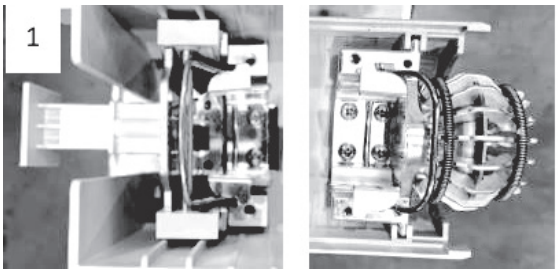

Fig 7j

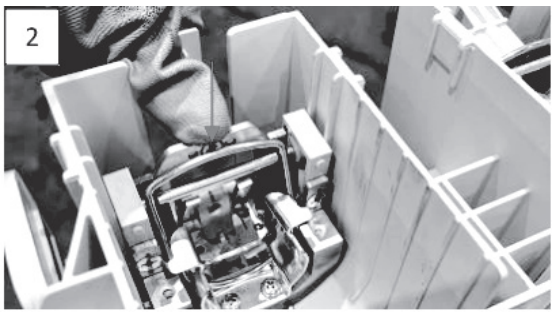

Fig 7k

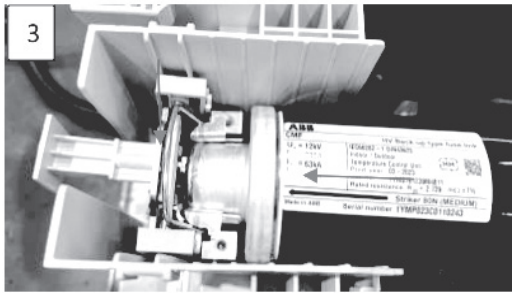

Fig 7l

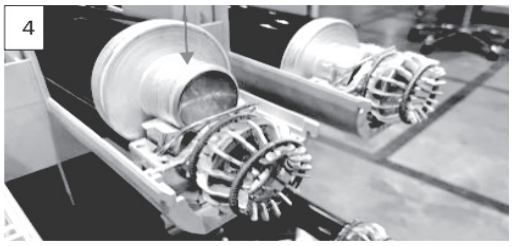

Fig 7m

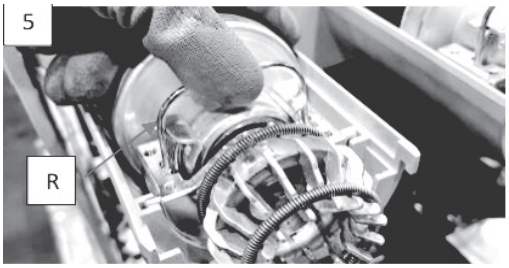

Fig 7n

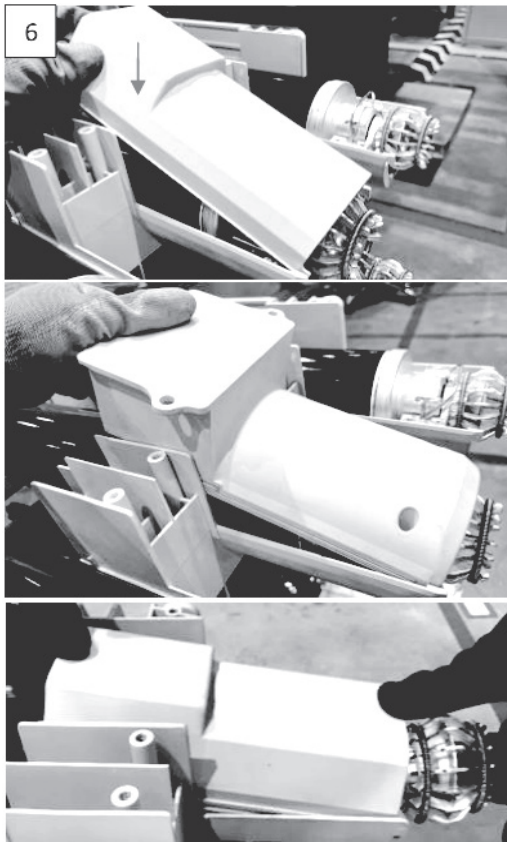

—
Fig 7o

—
Fig 7p

7.5.4 Fuses of BS Standards replacement

- Mounting the adapters
  The fuse holder is preset to take fuses with fixing center distance of 454 mm. For smaller sizes, adapters are needed, as indicated below:
  - Adapter for fuses with fixing center distance l = 305 mm
    Select the type of adapter, fix it onto the fuse on the striker side by means of the grub screws, the cup springs and the short nuts. Mount the adapter with the extension, with the cap facing the striker, torque is 25 Nm (Fig 7q)

- Mounting the fuses
  Remove the plastic housing of the fuse.

  Mount the fuses or the adapter (preassembled as indicated in par. a) with the striker, (indicated by the arrow) facing the opposite side to the one of the contactor tulips and fix them by means of the screws and the spring washers.

  Put back the plastic housing.

- Dismantling the fuses
  To dismantle the fuses and relative adapters, proceed in reverse order to the previous chapter of “mounting the fuses”.

—
Fig 7q

—
Fig 7r

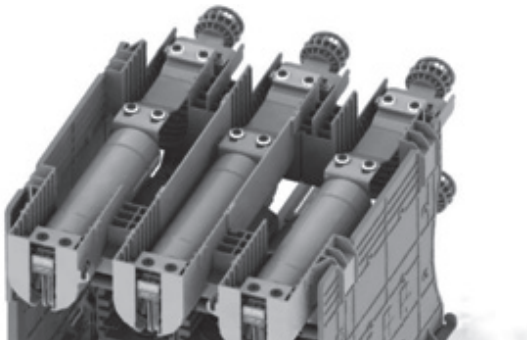

—
Fig 7s

7.5.5 Mounting and dismantling the short-circuit busbar

Mount the busbar with the feeler pin on the opposite side to that of the tulips and fix it with the screws, torque is 25 Nm, as Fig 7t and 7u.

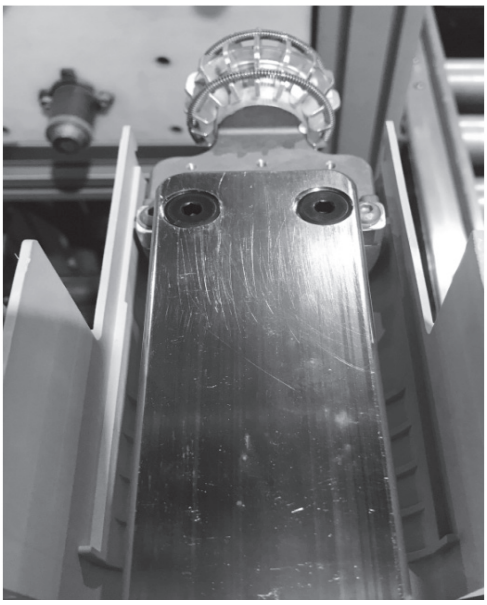

—
Fig 7t

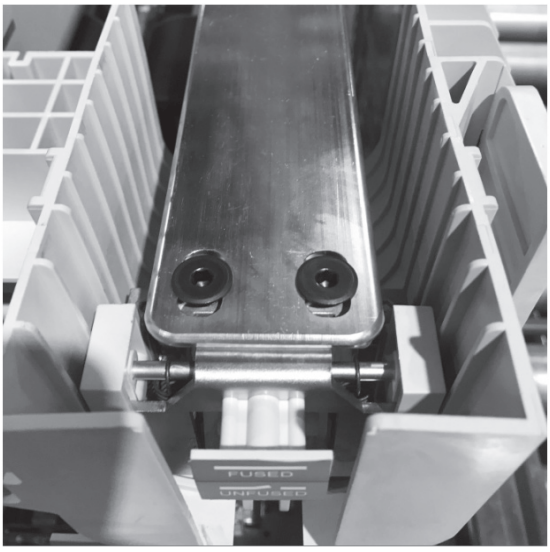

—
Fig 7u

7.6 Mount and Remove the fuse of self-supply VT

Confirm safety before operation (All the power supply sources must be turned off) Confirm that the contactor is in Open position

Remove the front cover of the contactor

Remove the fuse by loosing two screws on top of VT (Fig 7v) remove the fuse cap, compress spring and the fuse (Fig 7w).

Reinstall the fuse into the fuse container, put back the compress spring, and fix the cap onto the VT

Reinstall the plastic housing

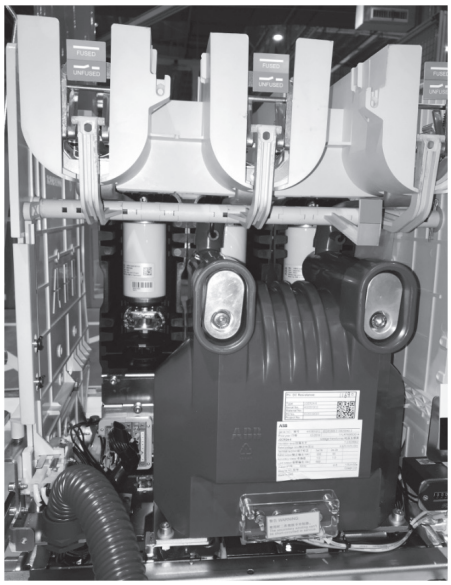

—
Fig 7v

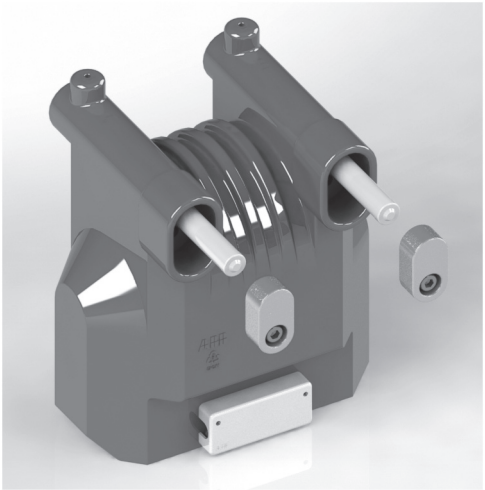

—
Fig 7w

8. Spare parts and accessories

To order contactor spare parts/accessories, refer to ConVac user manual and always state the following:

- Type of contactor
- Serial number of the contactor
- Rated voltage of the contactor
- Rated current of the contactor
- Rated voltage and frequency of any electrical spare parts

For availability and to order spare parts, please contact ABB Service

List of spare parts

- Power control module
- Auxiliary contacts
- Operation counter
- Adapters for fuses
- Tulips
- Locking magnet in the truck
- Microswitches
- Mechanical latched kit (RiMe)

9. Product quality and environmental protection

The pieces of ConVac contactors are produced in compliance with the requirements of the international standards regarding quality and environmental management systems. In these

fields, the excellent level is proved by availability of the ISO 9001 and ISO 14001 certificates.

End of product life

- ABB is committed to respecting the requirements and laws for protection of the environment laid down according to the ISO 14001 Standard
- ABB offers its competency and collaboration in facilitating recycling and disposal of the products at the end of their life
- It is always necessary to act in compliance with the local regulations in force for disposal of the products

Methods of disposal

Disposal can either be carried out with thermal treatment in an incineration plant or by storage in special areas.

Material	Recommended method of disposal
Metals (Fe, Cu, Al, Ag, Zn, W, others)	Separation and recycling
Thermoplasts	Recycling or disposal
Epoxy resin	Separation of metal parts and disposal of resin parts
Rubber	Disposal
Wood for packing	Recycling or disposal
Aluminium foil for packing	Recycling or disposal

ABB Xiamen Switchgear Co., Ltd.
No.885, FangShanXiEr Road, Xiang'an District,
Xiamen, Fujian, 361101
Tel: +86-592-602 6033

ABB China Contact Center
Hotline (China): 400-820 9696
800-820 9696 (fix line only)
Hotline (Overseas): +86-21-3318 4688
E-mail: contact.center@cn.abb.com

www.abb.com

© Copyright 2024 ABB. All rights reserved.
Specifications subject to change without notice.

1YHA000325_EN_REV E-VI 11-2024
XM-VS